ESG-451 Weekly Status Update
PhytoPi

1. Project Description

PhytoPi is an IoT-based controlled environment system for supporting a plant throughout its entire growth cycle with minimal human intervention. Utilizing embedded hardware and a machine learning system monitoring the plant using a camera, PhytoPi is designed to automatically care for more than 80% of a plant's required maintenance over its lifespan.

2. Project Status Summary — Percent Complete 12%

The PhytoPi project is on-track for completion on the projected timeline, currently, the Hardware/Integration Lead is focused on completed the electrical wiring diagram and the privacy policy document writeup. The Software/Cloud Lead is focused on finishing the CAD/Blender design and preparing to start the database schema design. The current version of the Blender design and the wiring diagram are shown below in Figures 2 and 3.

3. Timeline Snapshot

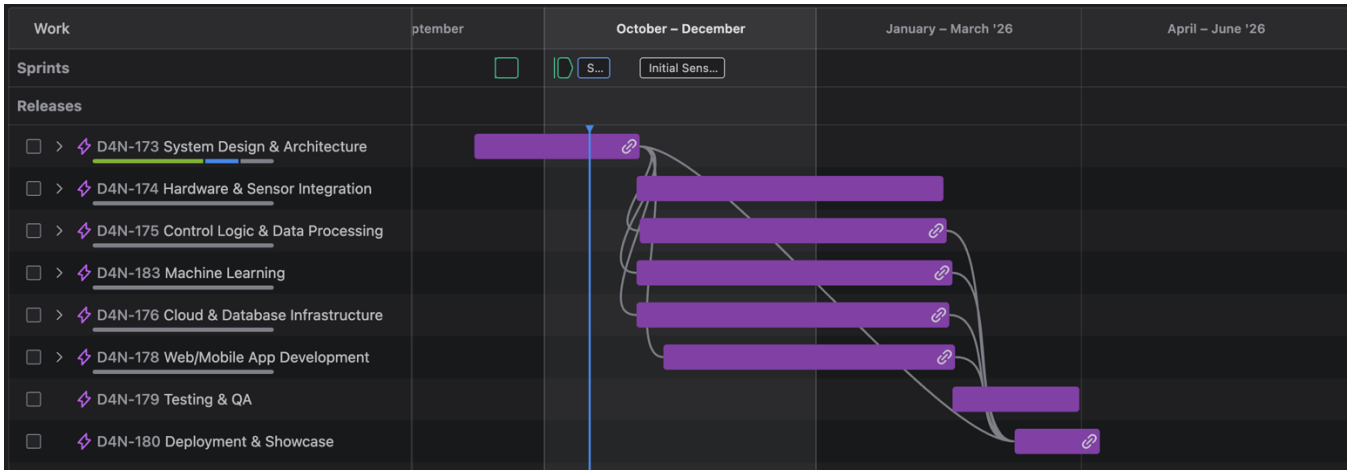

4. Current Concept

The current design concept (see Figure 1) includes an improved design from version 0.2 by enforcing N-layer architecture design by separating out the system into 4 different layers. This enhances data security by making sure the business logic layer alone handles database access for sensor control. In Figure 2 we created a prototype of our physical product architecture. In Figure 3 we have a rough sketch of the start of our wiring diagram, showing the soil moisture sensor

© 2023. Grand Canyon University. All Rights Reserved.

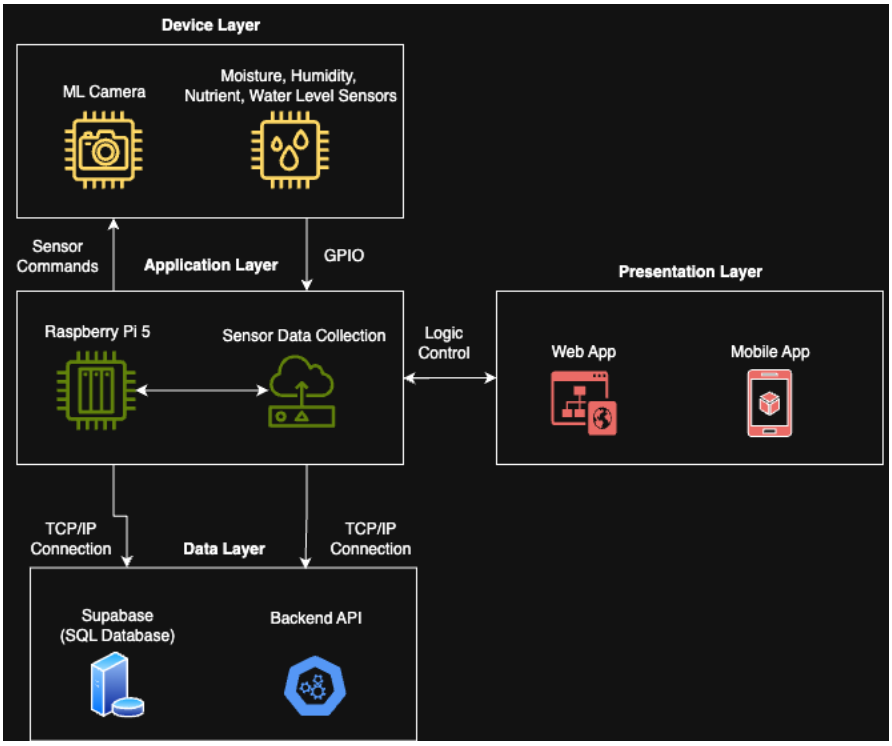

Figure 1. Current Design Concept - System Architecture Version 0.2

© 2023. Grand Canyon University. All Rights Reserved.

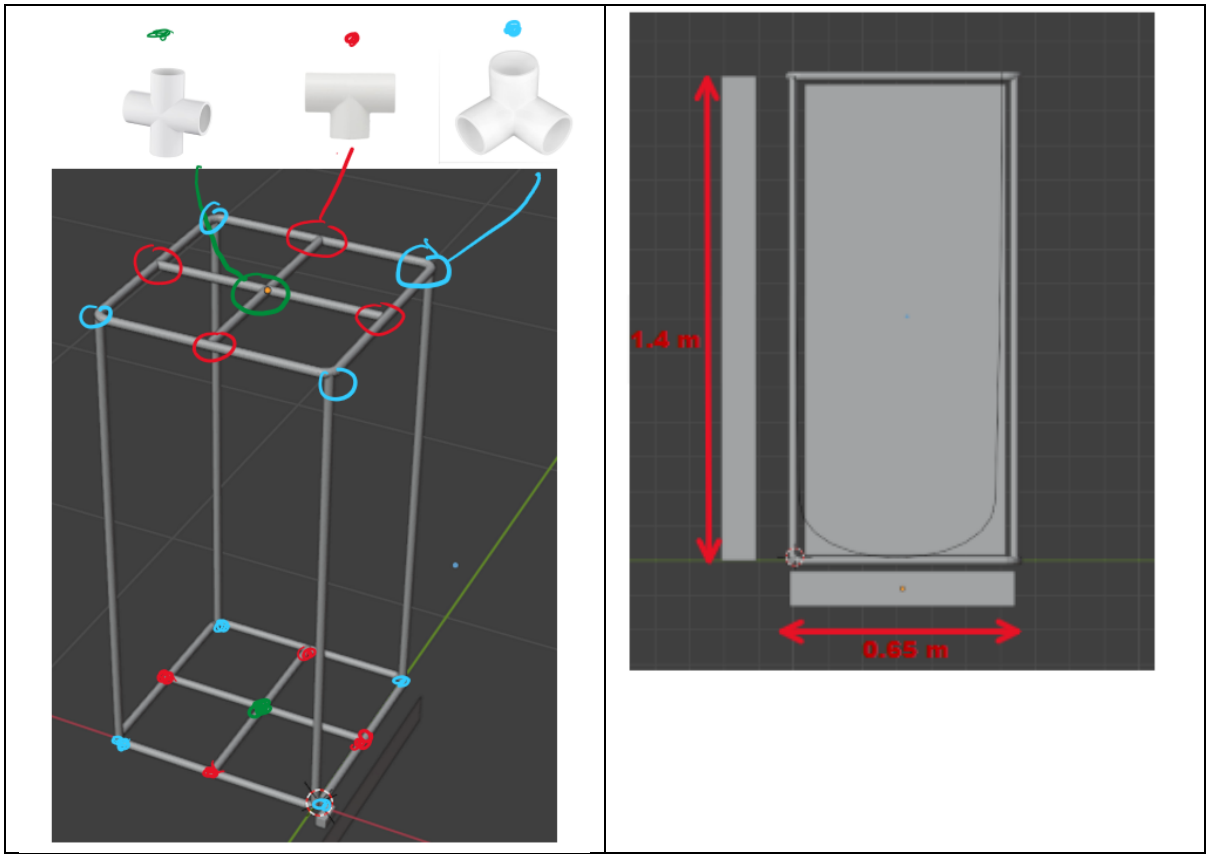

Figure 2. Current Design Concept – 3D Model of final product v0.1

© 2023. Grand Canyon University. All Rights Reserved.

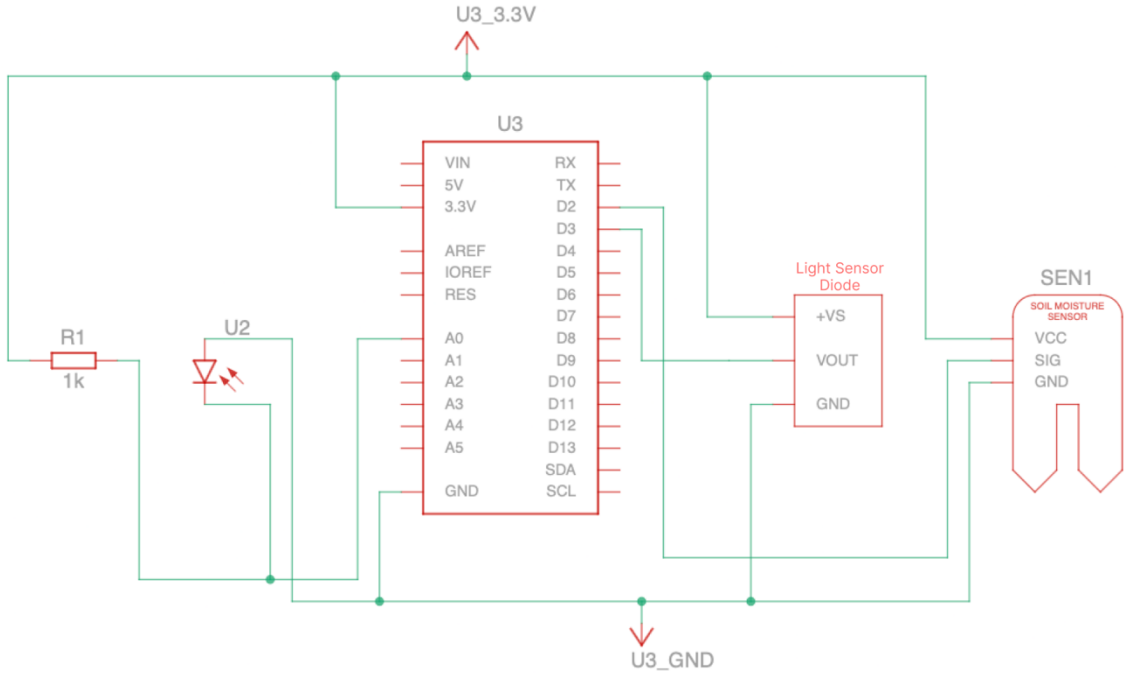

Figure 3. Current Design Concept – Wiring Diagram v0.1

5. Accomplishments and Learning

Planned from last week:

- Grooming Jira backlog – completed
- Interview stakeholders to establish all user stories – completed
- Define all functional/nonfunctional requirements – completed
- Finalize all project requirements – 80% complete
- Finalize project timeline – completed
- Blender system design – 50% complete
- Electrical design – 25% complete
- Privacy agreement write-up – 10% complete

Unplanned:

- Entity relationship diagram for database
- High-level database schema
- Figma UI design

© 2023. Grand Canyon University. All Rights Reserved.

Learning:

- Efficiency for completing tasks concurrently is greatly increased when team members communicate desire to work on specific tasks.
- CAD/Blender design is a critical task for visualizing project and completing future tasks such as sensor integration
- Coordinating team meetings is difficult outside of class time, best time for team meetings is typically immediately after class or over video call.

6. Work Planned for Next Week

- Critical Path – Finish the electrical and 3D designs for the enclosure.
- Further research accuracy of soil nutrient/pH collection/detection methods through a sensor connected to the Raspberry Pi's GPIO.
- Test/research all sensors for accurate data collection/compatibility.
- Determine data timestamping schema/convention, transportation of sensor data.
- Start Figma UI design for mobile and web app.
- Start database design such as schema and entity relationship diagram.

7. Risks

- During Initial Sensor Testing milestone, it may be the case that the sensors do not calibrate or read as expected. This could cause a time delay which is why there is set aside more than 2 weeks for sensor setup. It will have to be decided whether the accuracy of the sensors meets our acceptance criteria and nonfunctional requirements for accuracy.
- For the overall system design, to ensure data safety the N-layer design architecture will need to be enforced. However, when designing data flow for the system, it may be the case that Supabase's method of data transfer to the UI may violate this architectural design, thus requiring a business logic layer to enforce strict separation of the data layer and the UI that users see to follow the N-layer architecture design pattern. This may cause a time delay in the upcoming database design tasks for up to 1 week.

8. Deliverables and Milestones

Milestone	Planned	Forecasted	Actual	Status
Finalize User Stories	10/5/25	10/5/25	10/5/25	Complete
All System Design Modeling	10/22/25	10/22/25	N/A	On Schedule
Complete Initial Sensor Testing	11/30/25	11/30/25	N/A	On Schedule

© 2023. Grand Canyon University. All Rights Reserved.

Database Preparation and Testing	11/30/25	11/30/25	N/A	On Schedule
Deliverable	Planned	Forecasted	Actual	Status
Create Figma UI Design	10/22/25	10/22/25	N/A	On Schedule
Fully Complete Materials Requirements	10/12/25	10/12/25	10/12/25	Complete
Electrical Wiring Diagram	10/22/25	10/22/25	N/A	On Schedule

9. ATTACHMENTS

N/A

© 2023. Grand Canyon University. All Rights Reserved.

Approvals:

Team Role	Print Name	Signature	Date
Product Manager/Hardware + Integration Lead	Nolan Tuttle	Nolan Tuttle	10/17/25
Software + Cloud Lead	Daniel Grijalva	Daniel Grijalva	10/17/25
Faculty Mentor	Bill Hughes	Bill Hughes	10/17/25

© 2023. Grand Canyon University. All Rights Reserved.