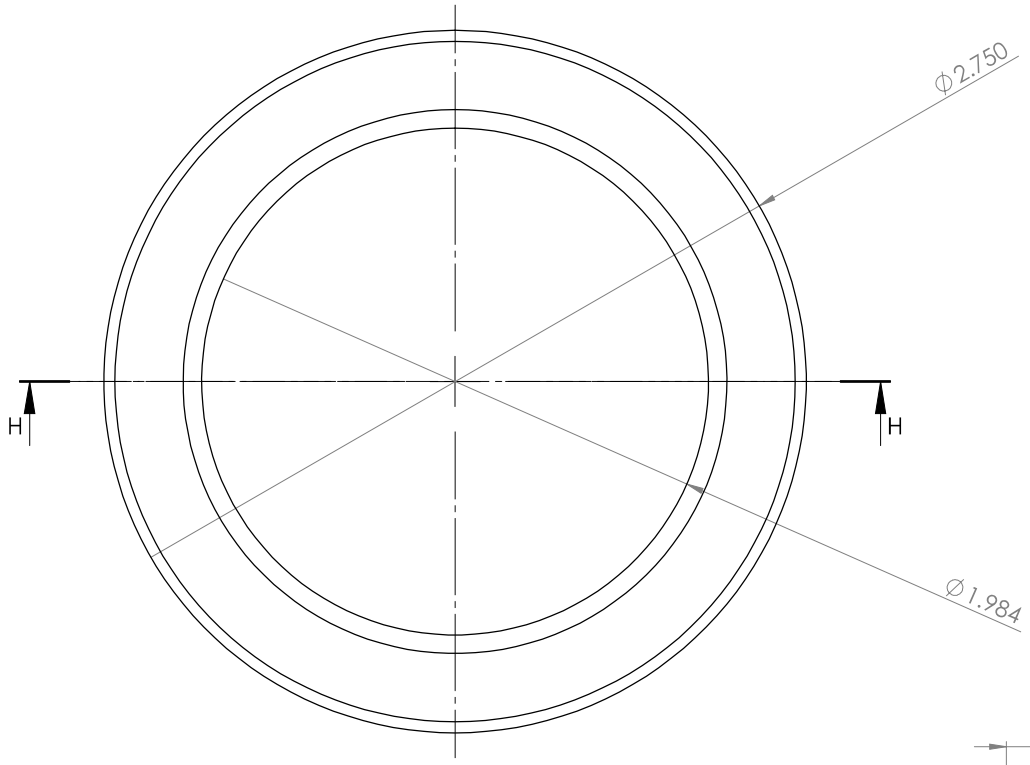

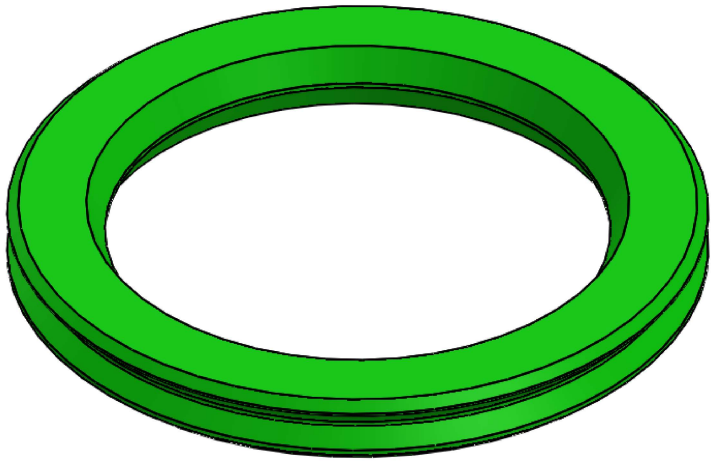

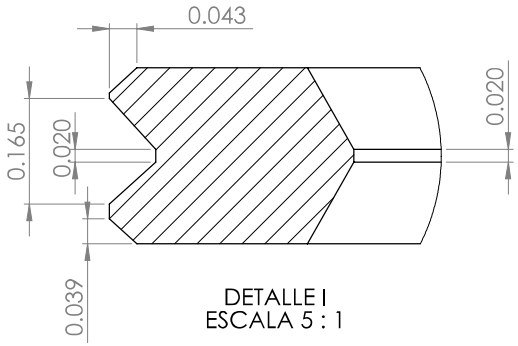

DETALLE I
ESCALA 5 : 1

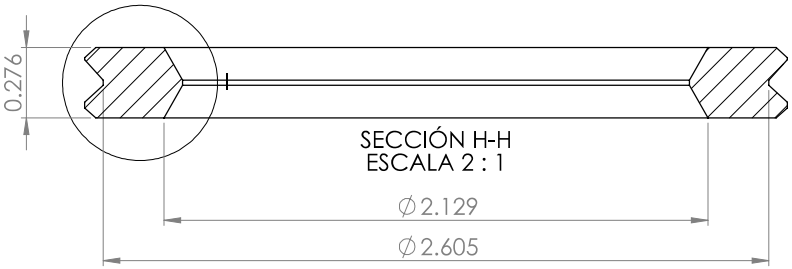

SECCIÓN H-H
ESCALA 2 : 1

NO.	CHANGES	BY/DATE
1	Cambio de diametros	CIV/ Jun-19
0	Design	CIV / MAY-17

PHC Valeo

PLANT: ***Valeo - Kapec***

FAMILY NAME: ***JATCO***

PART NAME: Sello prueba de fuga Jatco

MATERIAL: Nitrilo 85 shore A | TREATMENT: ***N/A***

DESCRIPTION

DRAWN BY: ***Cesar Velazquez*** | DATE: 17/JUL/19

CHECKED BY; ***Cesar Velazquez*** | DATE: 17/JUL/19

ENGINEER: Fernando Rebolloso | APROVED

SHEET NO. ***1*** OF ***1*** | SCALE | A3

DWG. NO.

6.7.006 Rev 1

MACHINE LIMITS	UNITS: INCH
.0 = ±.02 .00 = ±.005 .000 = ±.001 .0000 = ±.0005 ANGLES = ±0°30` UNLESS OTHERWISESPECIFIED	REMOVE ALL UNNECESSARY SHARP EDGES AND BURRS MARK DETAILS WITH DETAIL NUMBER MARK DETAILS WITH TOOL NUMBER WHEN PRACTICAL MARK GAGES WHIT GAGE NUMBER AND PART NUMBER

THE ENGINEERING INFORMATION ON THIS PRINT IS THE PROPERTY OF VALEO - KAPEC
AND WILL NOT BE REPRODUCED WITHOUT OUR PERMISSION.