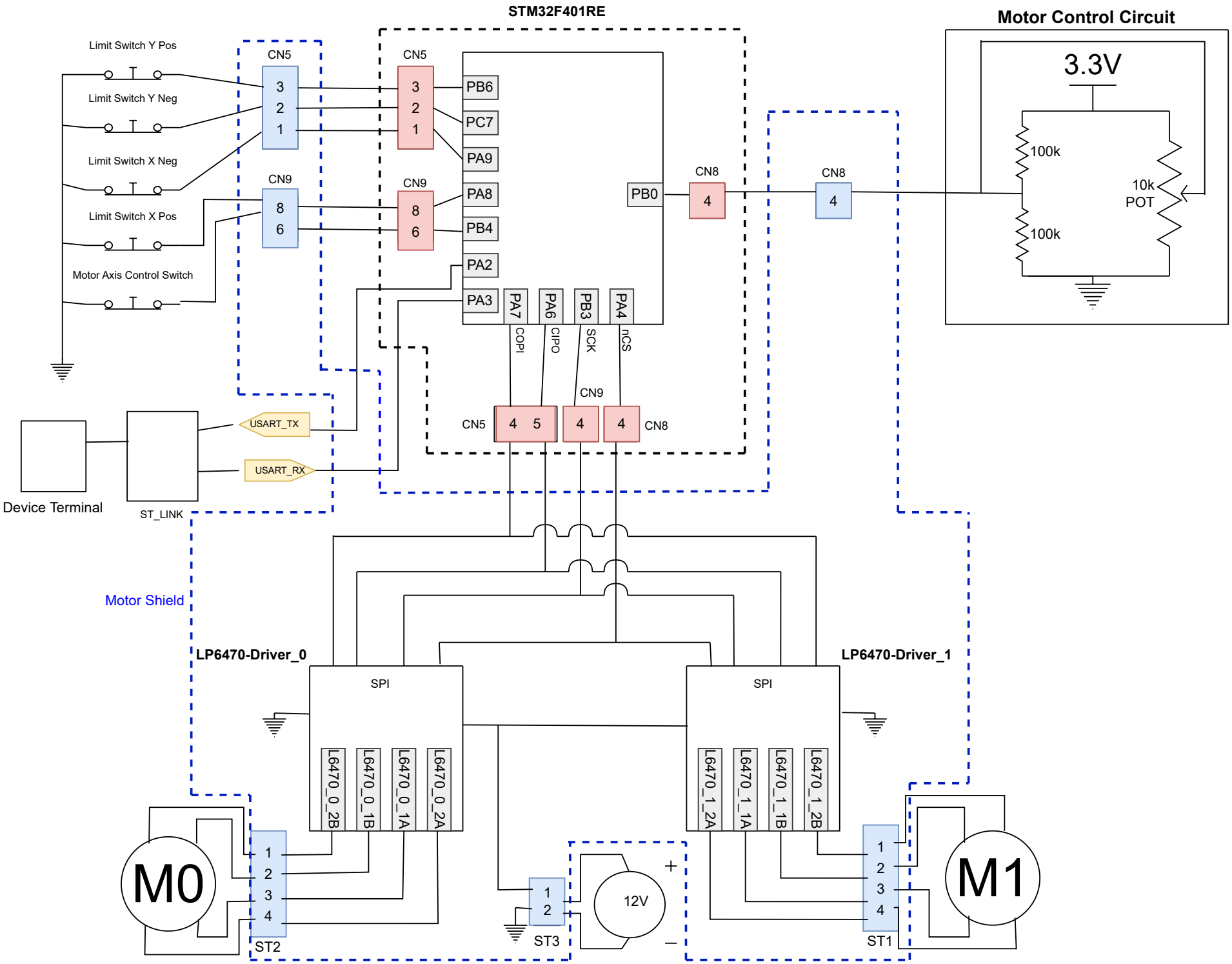
STM32F401RE
Motor Control Circuit
3.3V
100k
10k
POT
100k
Limit Switch Y Pos
Limit Switch Y Neg
Limit Switch X Neg
Limit Switch X Pos
Motor Axis Control Switch
CN5
CN9
CN8
PB6
PC7
PA9
PA8
PB4
PA2
PA3
PB0
PA7
PA6
PB3
PA4
COPI
CIPO
SCK
nCS
USART_TX
USART_RX
Device Terminal
ST_LINK
Motor Shield
LP6470-Driver_0
LP6470-Driver_1
SPI
L6470_0_2B
L6470_0_1B
L6470_0_1A
L6470_0_2A
L6470_1_2A
L6470_1_1A
L6470_1_1B
L6470_1_2B
M0
M1
ST2
ST3
ST1
12V
+
–