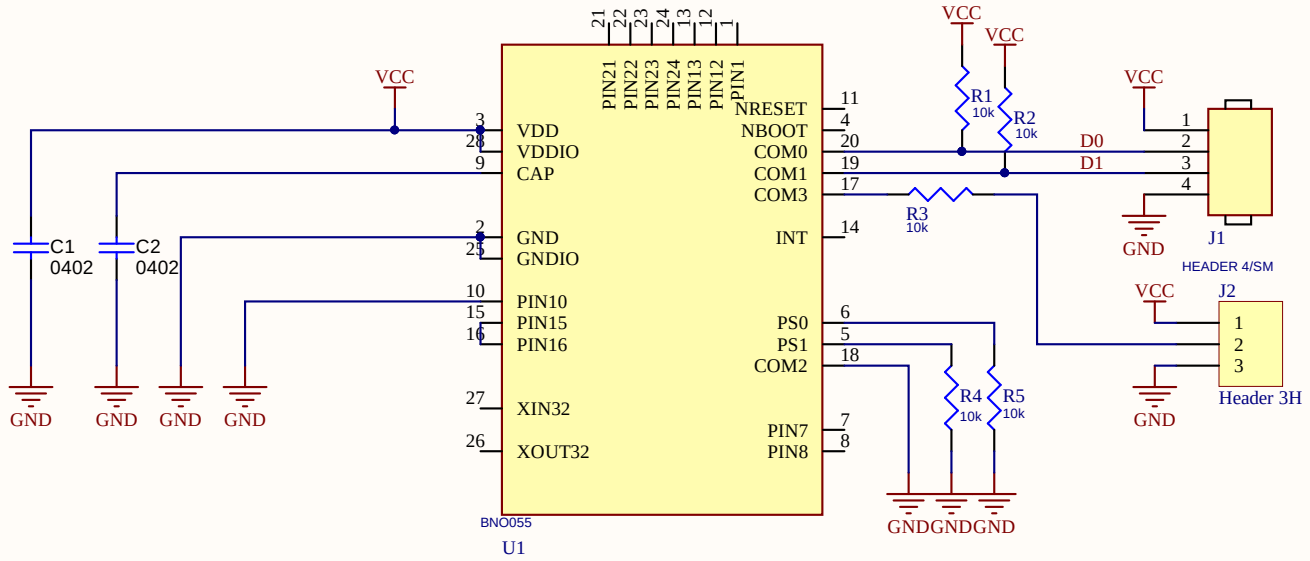

Title		
Size A	Number	Revision
Date: 1/20/2017		Sheet of
File: C:\Users\..\bno_aux.SchDoc		Drawn By:

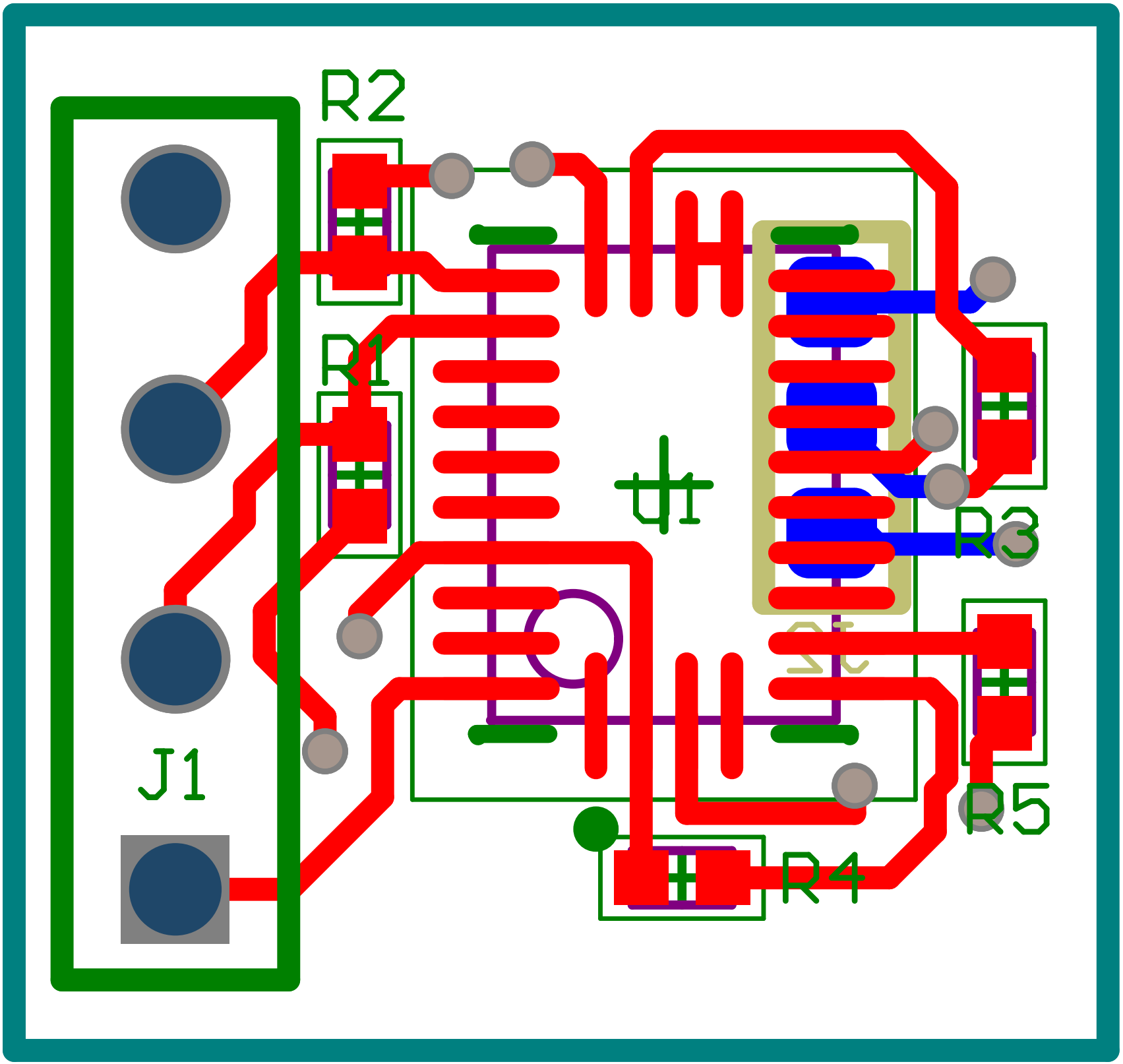
R2
R1
J1
R3
R5
R4