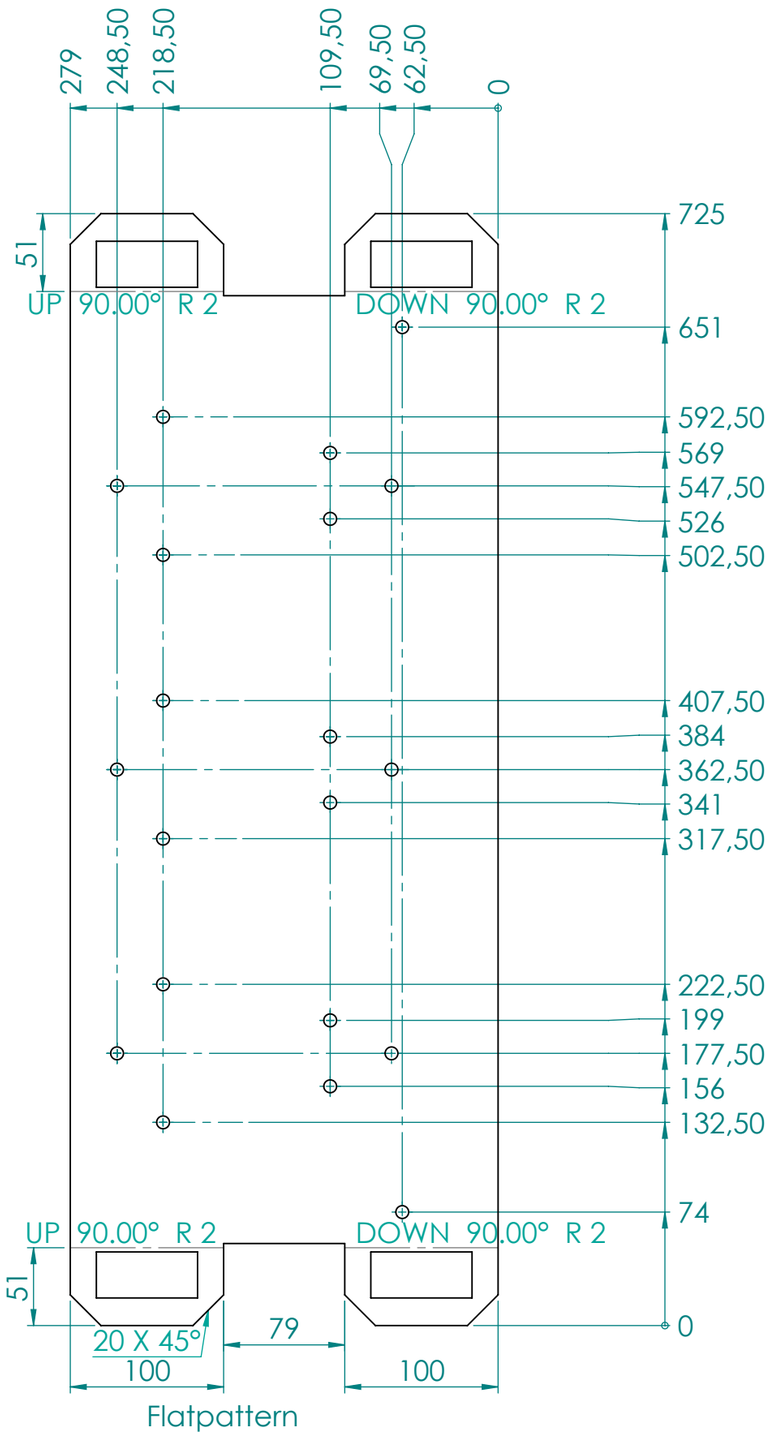

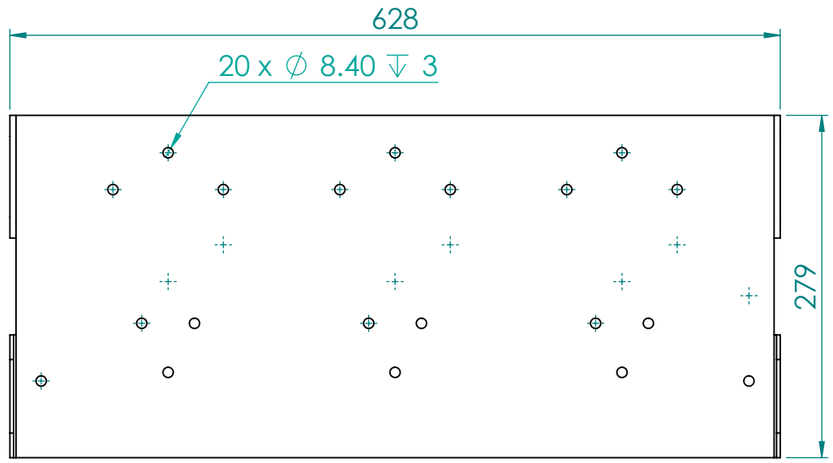

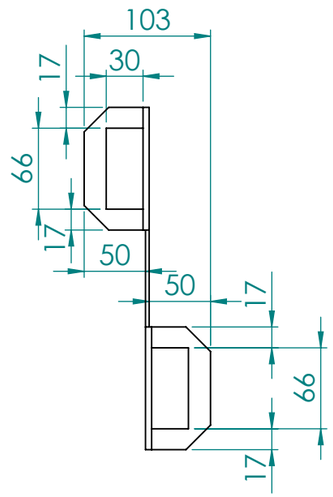

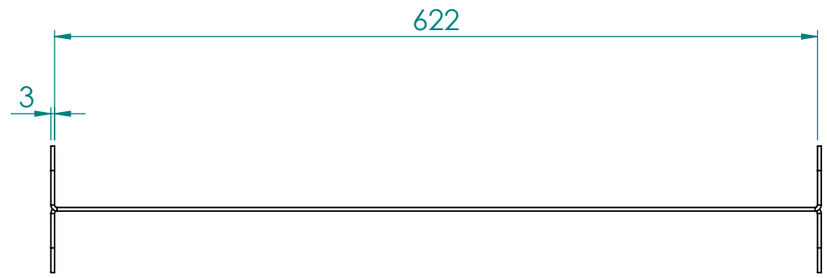

Rev.	Description	Prep.	Date
A			

Material: S235J2+N (EN10025-2, EN10051) mm

Surface finishing

Non-tolerated dimensions: ISO 2768-m

Weight: kg

Item ID: TRDOC0207834-01

TRAFOTEK FINLAND

Scale: 1:5 | Size: A3

Designer: R. Seli | Date: 28.03.2017

Checked

Approved: R. Seli | 28.03.2017

Title: Jig main plate

Project

Customer Doc. No

Design number: 24753B | Page: 1/1

Trafotek Doc. No: TRDOC0207834-01 | Rev: A

L204-1 010210 JKa

WE RESERVE ALL RIGHTS IN THIS DOCUMENT AND IN THE INFORMATION CONTAINED THEREIN. REPRODUCTION, USE OR DISCLOSURE TO THIRD PARTIES WITHOUT EXPRESS AUTHORITY IS STRICTLY FORBIDDEN.