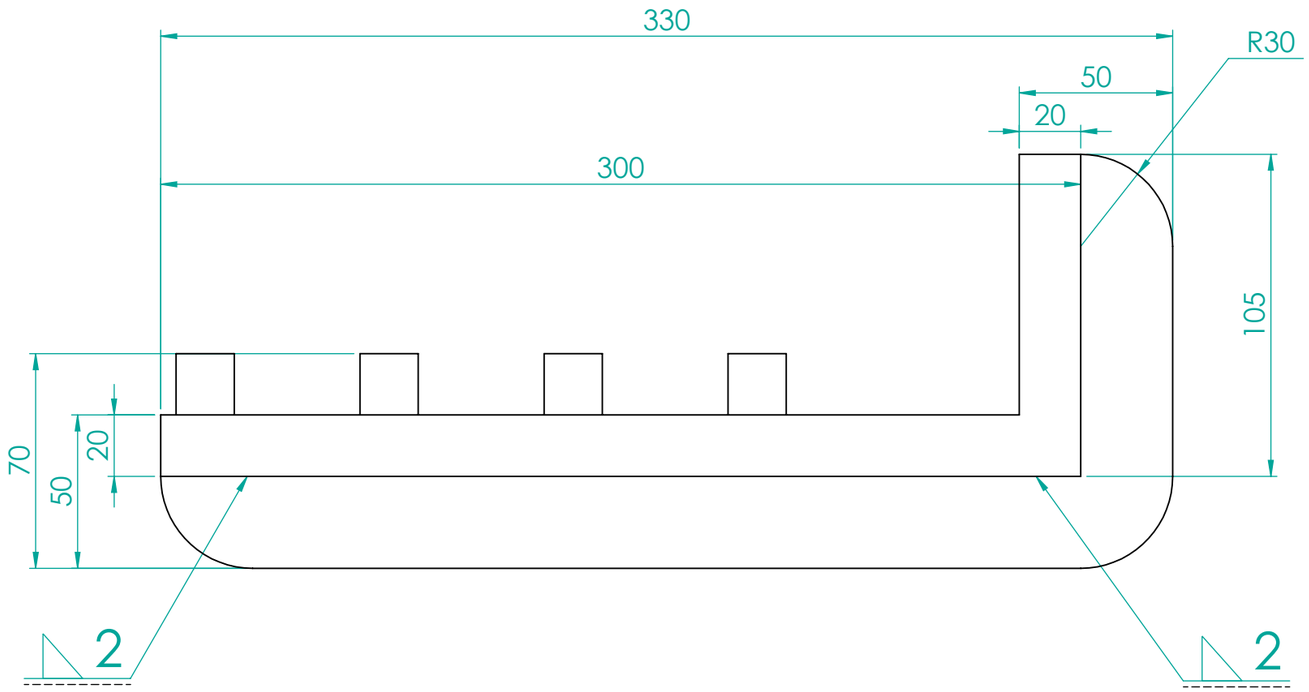

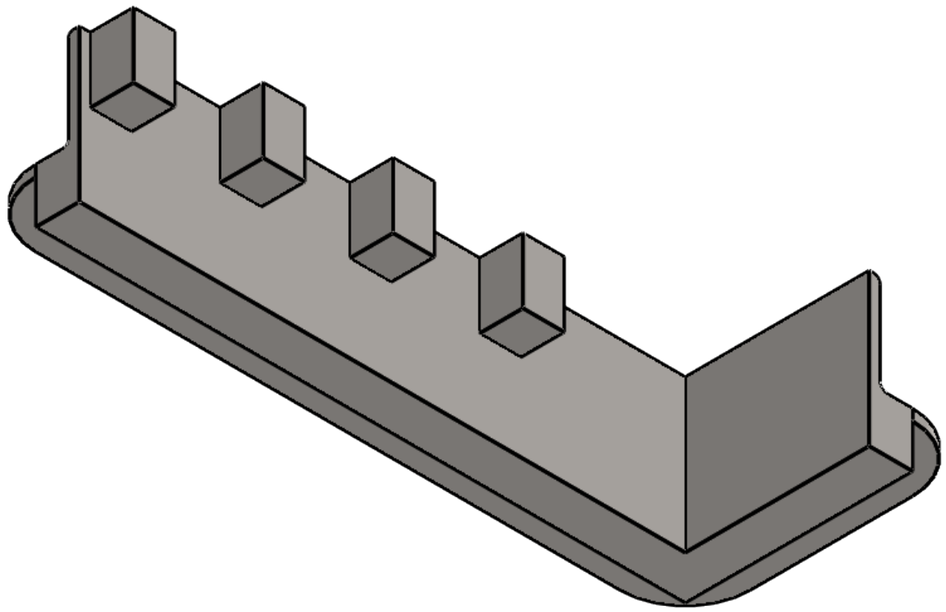

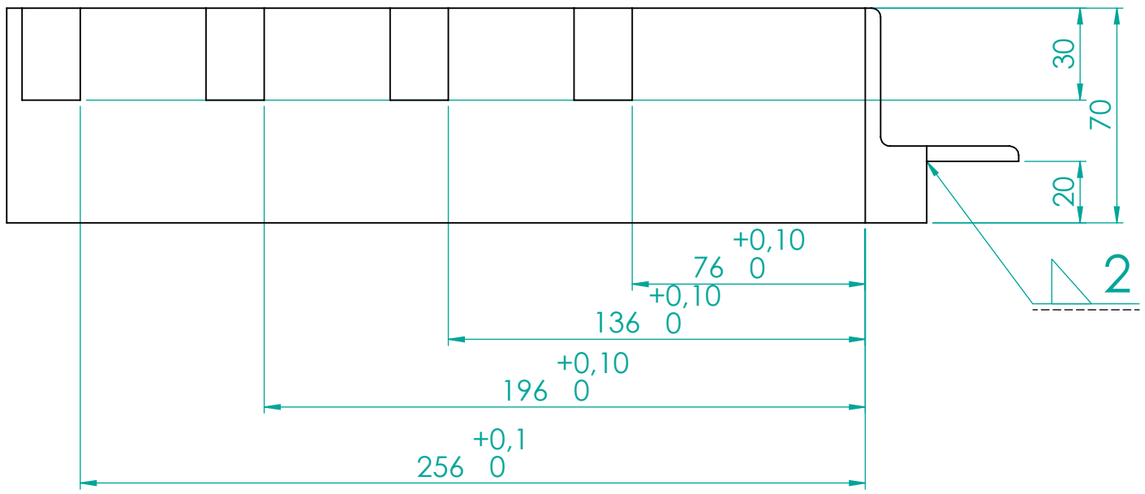

1. Remove the burs;
2. Blunt sharp edges.
3. Welding according to ISO 2523-2014;

Rev.	Description	Prep.	Date
D		KG	27.04.2022
C		KG	
B		KG	
A			

Material: S355

Surface finishing: Ra 6.4

Non-tolerated dimensions: ISO 2768-c

Weight: kg

Item ID: TRDOC0423255-01

AQ Trafotek

Scale: 1:5

Size: A3

Designer: M. Mikerov Date: 22.03.2022

Checked

Approved: M. Mikerov 23.03.2022

Title: BCHO Final Inspection JIG

Project

Customer Doc. No

Design number

Page: 1/1

Trafotek Doc. No: TRDOC0423255-01

Rev: D

WE RESERVE ALL RIGHTS IN THIS DOCUMENT AND IN THE INFORMATION CONTAINED THEREIN. REPRODUCTION, USE OR DISCLOSURE TO THIRD PARTIES WITHOUT EXPRESS AUTHORITY IS STRICTLY FORBIDDEN.