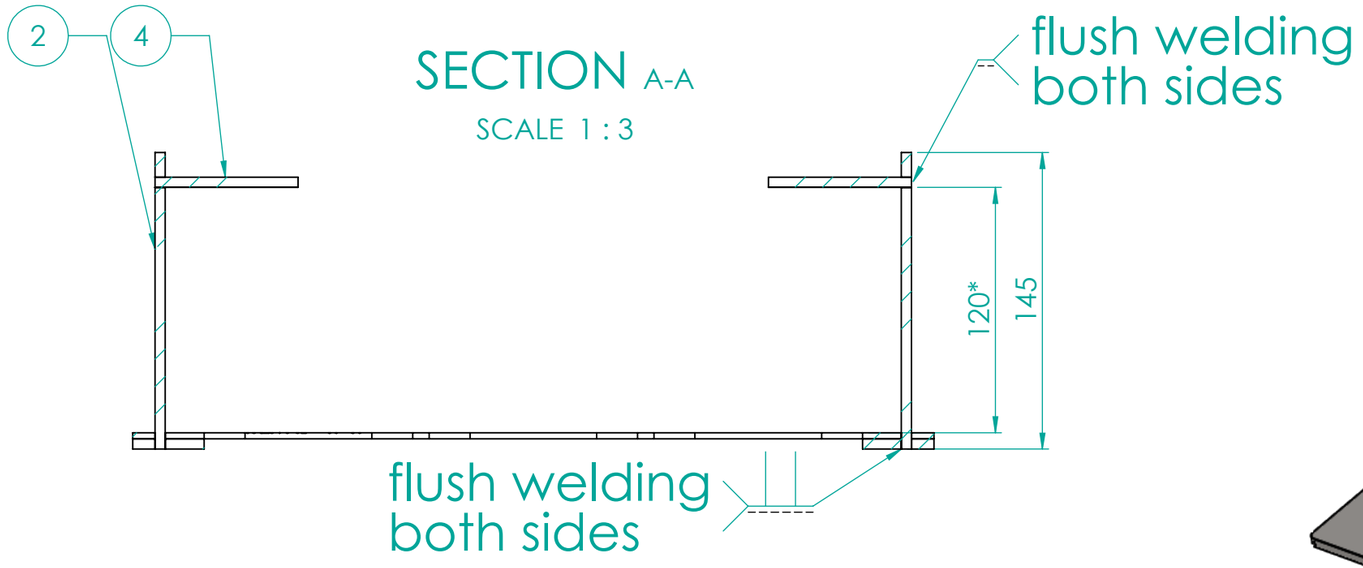

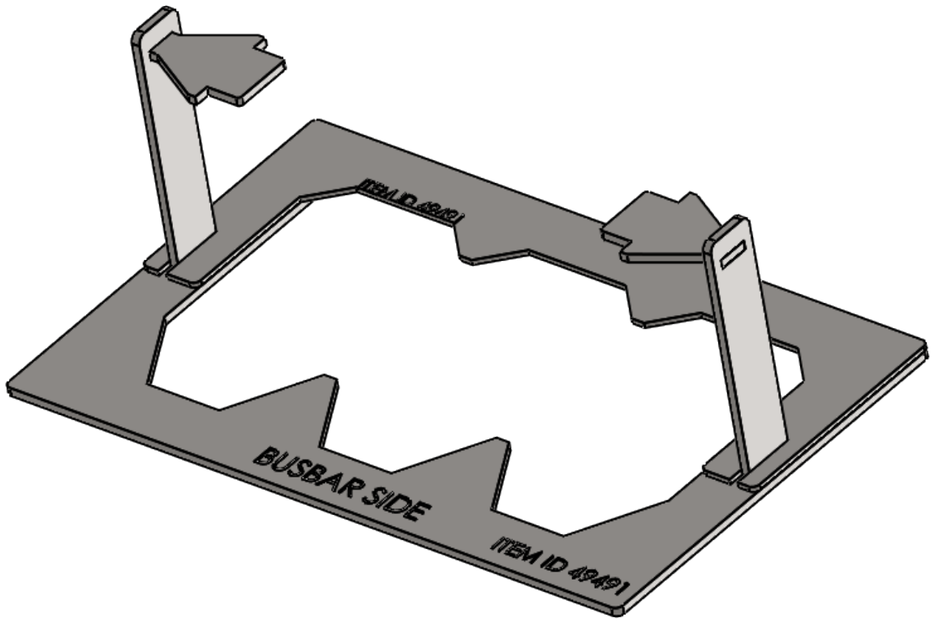

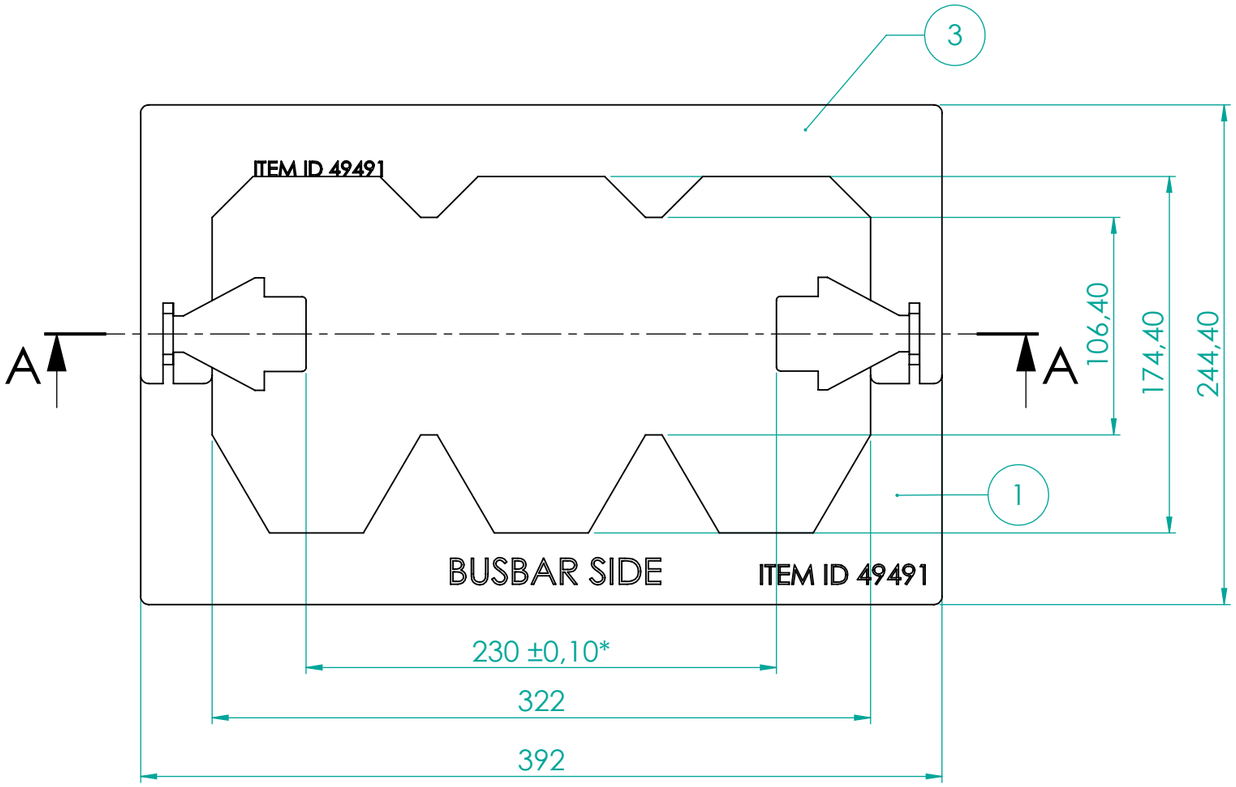

ITEM NO.	PART NUMBER	DESCRIPTION	QTY.
1	TRDOC0424102-01	Part_1_1	1
2	TRDOC0423686-01	side wall	2
3	TRDOC0424105-01	Part_2_2	1
4	TRDOC0423988-01	gorizontal wall	2

1. The dimensions are for reference only, exept marked *;
2. Welding according to ISO 2523-2014;
3. Blunt sharp edges;
4. Remove the burs.

Rev.	Description	Prep.	Date

Material: mm
Surface finishing
Non-tolerated dimensions
Weight: 2.31 kg
Item ID

AQ Trafotek

Scale: 1:5
Size: A3

Designer: Kirill Gavrilov
Date: 01.04.2022
Checked
Approved

Title: Contour ID 49491
Project

Customer Doc. No
Design number
Page: 1/1
Trafotek Doc. No: TRDOC0424104-01
Rev

WE RESERVE ALL RIGHTS IN THIS DOCUMENT AND IN THE INFORMATION CONTAINED THEREIN. REPRODUCTION, USE OR DISCLOSURE TO THIRD PARTIES WITHOUT EXPRESS AUTHORITY IS STRICTLY FORBIDDEN.