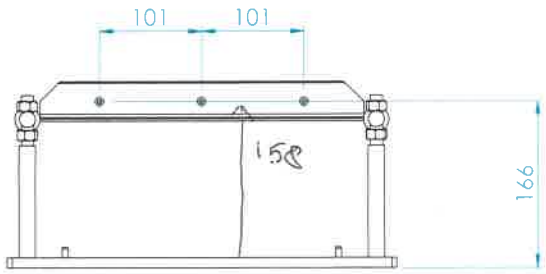

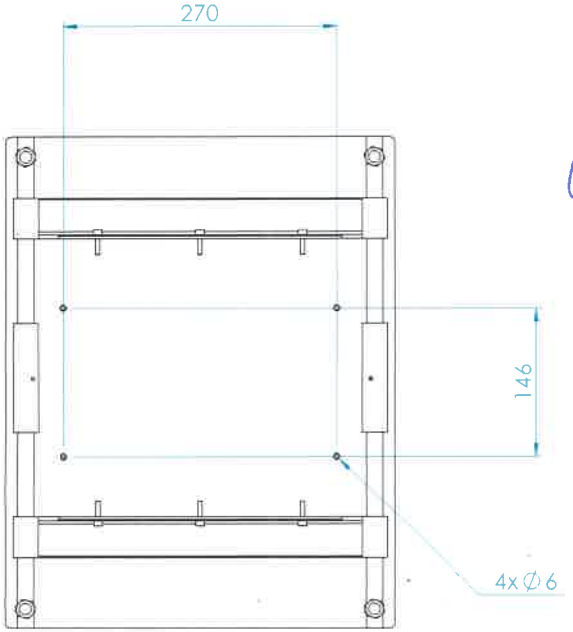

143

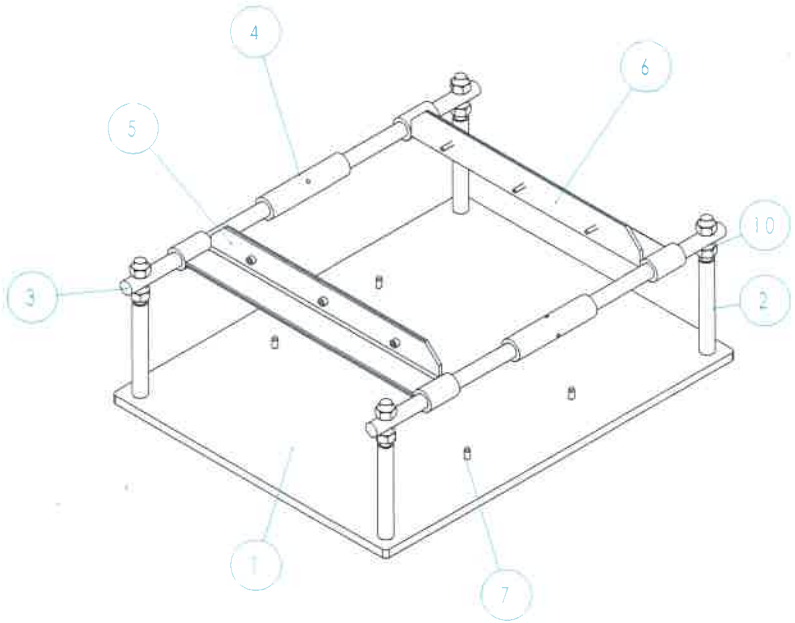

ITEM NO.	PART NUMBER	DESCRIPTION	QTY.
1	TRDOC0402724-01	Plate 10mm	1
2	TRDOC0402725-01	Pin ⌀16	4
3	TRDOC0402726-01	Round bar ⌀16, L-490	2
4	TRDOC0402727-01	Tube ⌀25/⌀16, L-108	2
5	TRDOC0402730-01	Carriage right	1
6	TRDOC0402769-01	Carriage left	1
7	TRDOC0402771-01	DIN 7979 Ø06×16	4
8	Kuusiokoloruuvi DIN EN ISO 10642M8x30	Kuusiokoloruuvi	4
9	Kuusiokoloruuvi DIN EN ISO 10642M4x10	Kuusiokoloruuvi	4
10	Kuusiomutteri DIN EN ISO 4032 M12	Kuusiomutteri	8

Rev.	Description	Prep.	Date

Material: mm
Surface finishing:
Non-toleranced dimensions
Weight: 19.60 kg
Item ID

AQ Trafotek

Scale: 1:5 Size: A3

Designer: D. Rybalkin Date: 01.06.2021
Checked
Approved
Project

Title: Inspection jig for 14650B

Customer Doc. No
Design number
Page: 1/1
Trafotek Doc. No: TRDOC0402770-01
Rev.

WE RESERVE ALL RIGHTS IN THIS DOCUMENT AND IN THE INFORMATION CONTAINED THEREIN. REPRODUCTION, USE OR DISCLOSURE TO THIRD PARTIES WITHOUT EXPRESS AUTHORITY IS STRICTLY FORBIDDEN