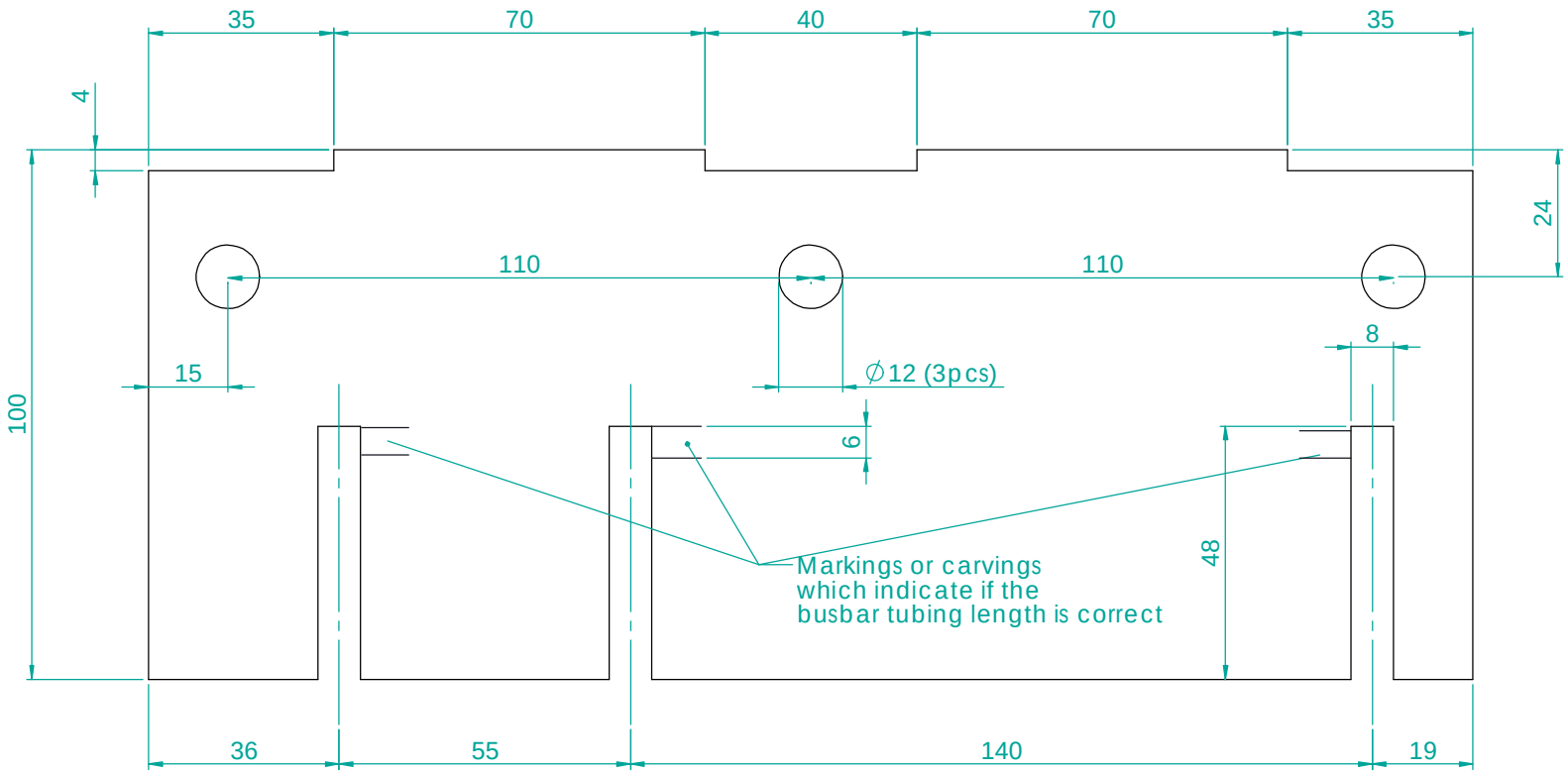

Thickness 4mm

Rev.	Description	Prep.	Date

Material: S235J2+N (EN10025-2, EN10051) 4mm

Surface finishing

Non-tolerated dimensions

Weight: 0.72 kg

Item ID

TRAFOTEK FINLAND

Scale: 1:1

Size: A3

Designer: JR

Date

Checked

Approved

Title: 17795 tarkastusjigi

Project

Customer Doc. No

Design number

Page: 1/1

Trafotek Doc. No

Rev

L204-1 010210 JKa

WE RESERVE ALL RIGHTS IN THIS DOCUMENT AND IN THE INFORMATION CONTAINED THEREIN. REPRODUCTION, USE OR DISCLOSURE TO THIRD PARTIES WITHOUT EXPRESS AUTHORITY IS STRICTLY FORBIDDEN.