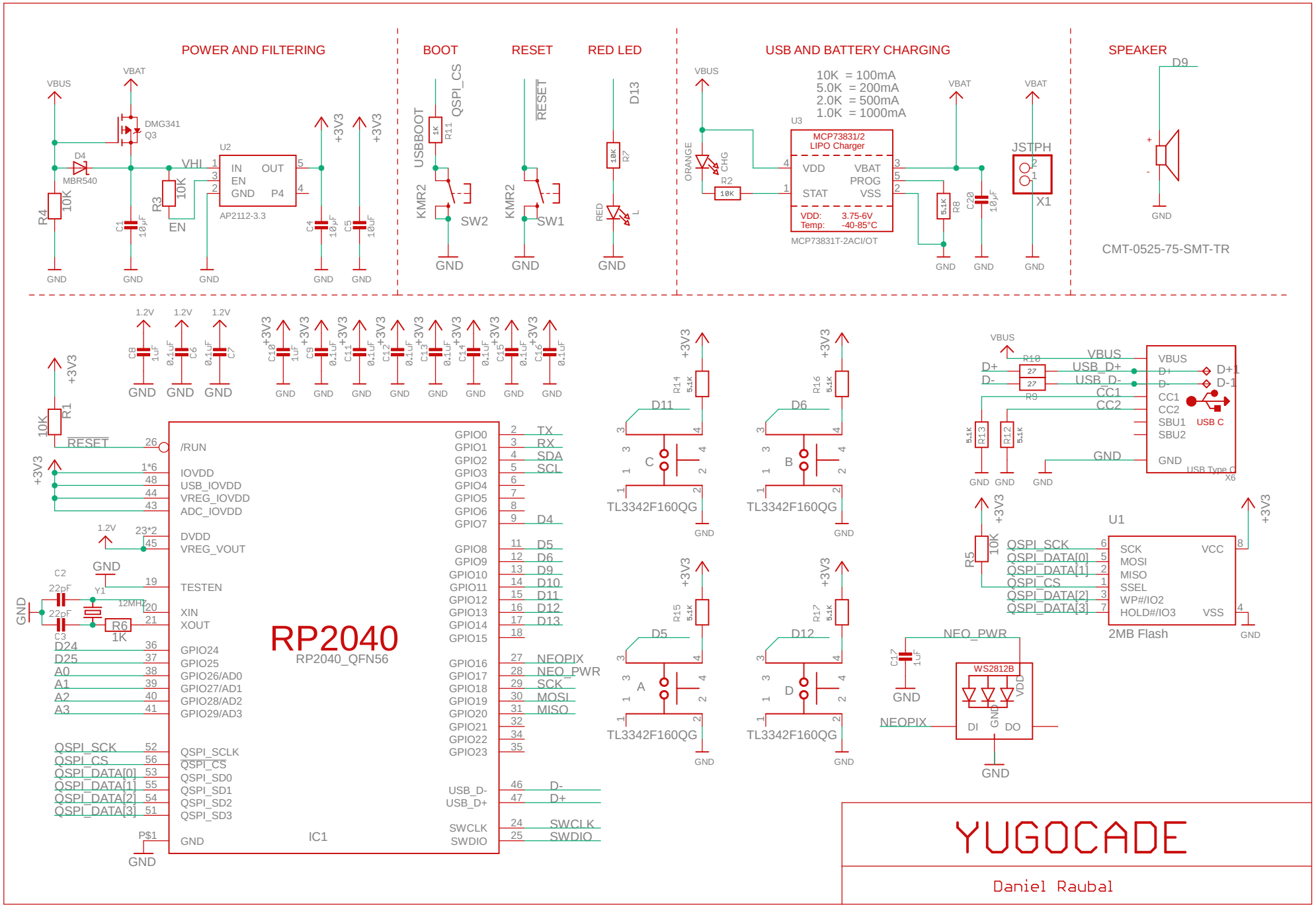

5/31/2023 10:22 PM D:\YugoCade\Yugocade.sch (Sheet: 1/1)