REMOVE THE JUMPER AT JP3 THAT IS CONNECTING PIN 1 TO 2 AND MOVE IT TO CONNECT FROM PIN 2 TO PIN 3. THIS WILL ALLOW THE SIGNAL 'RA3' TO WORK PROPERLY.

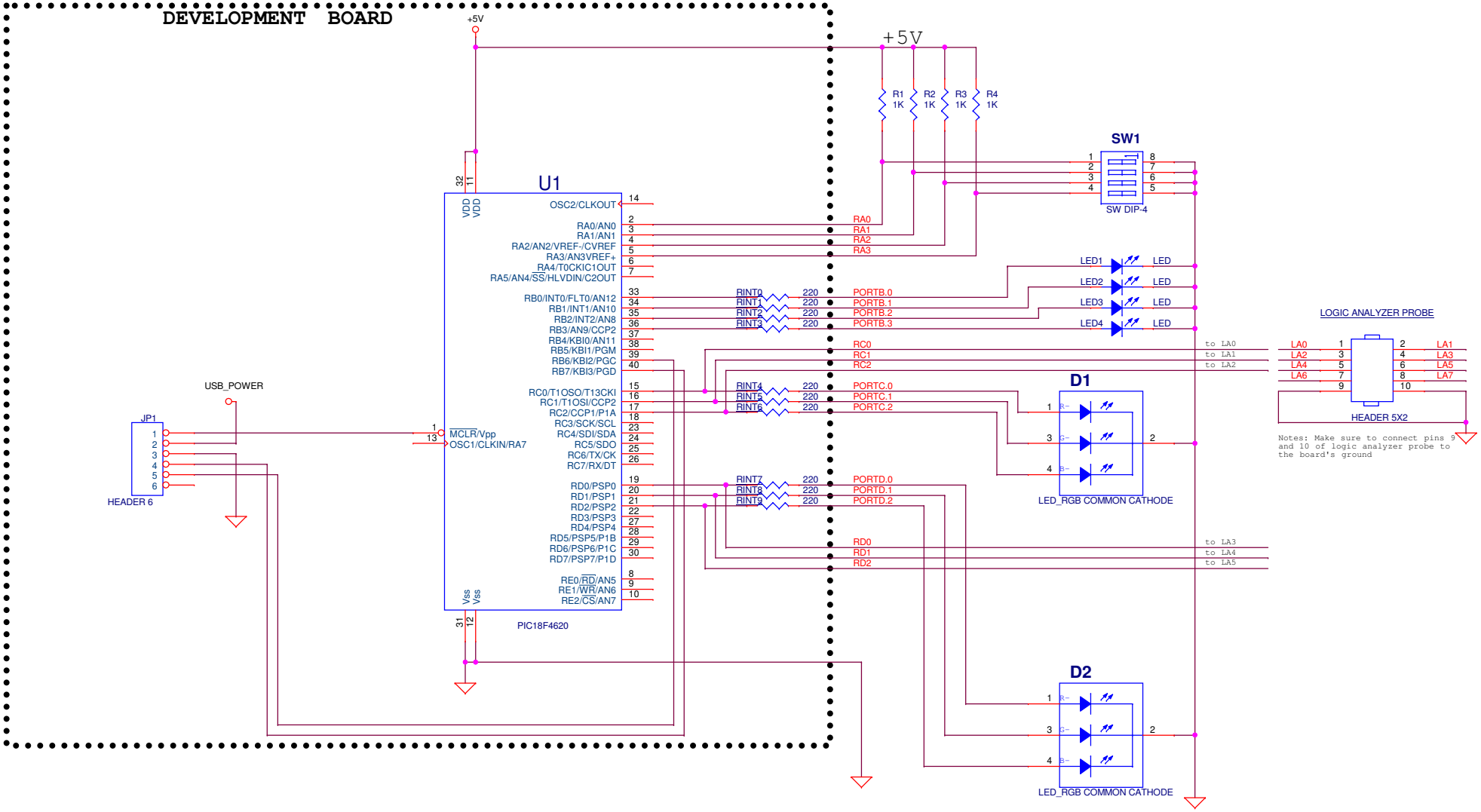

ECE3301L SESSION 1
LAB 2