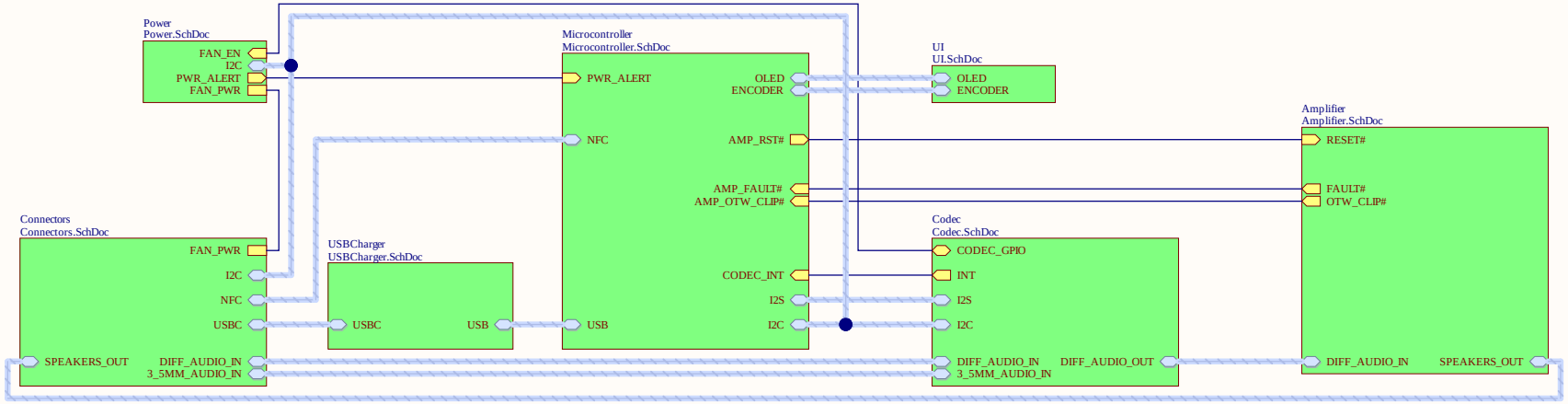

Title	*There Might Be Noise*	
Number: dk_01017	Revision: v2.0	Danius Kalvaitis
Date: 8/29/2024	Sheet 1 of 9	
File: ThereMightBeNoise.SchDoc	Author Danius Kalvaitis	

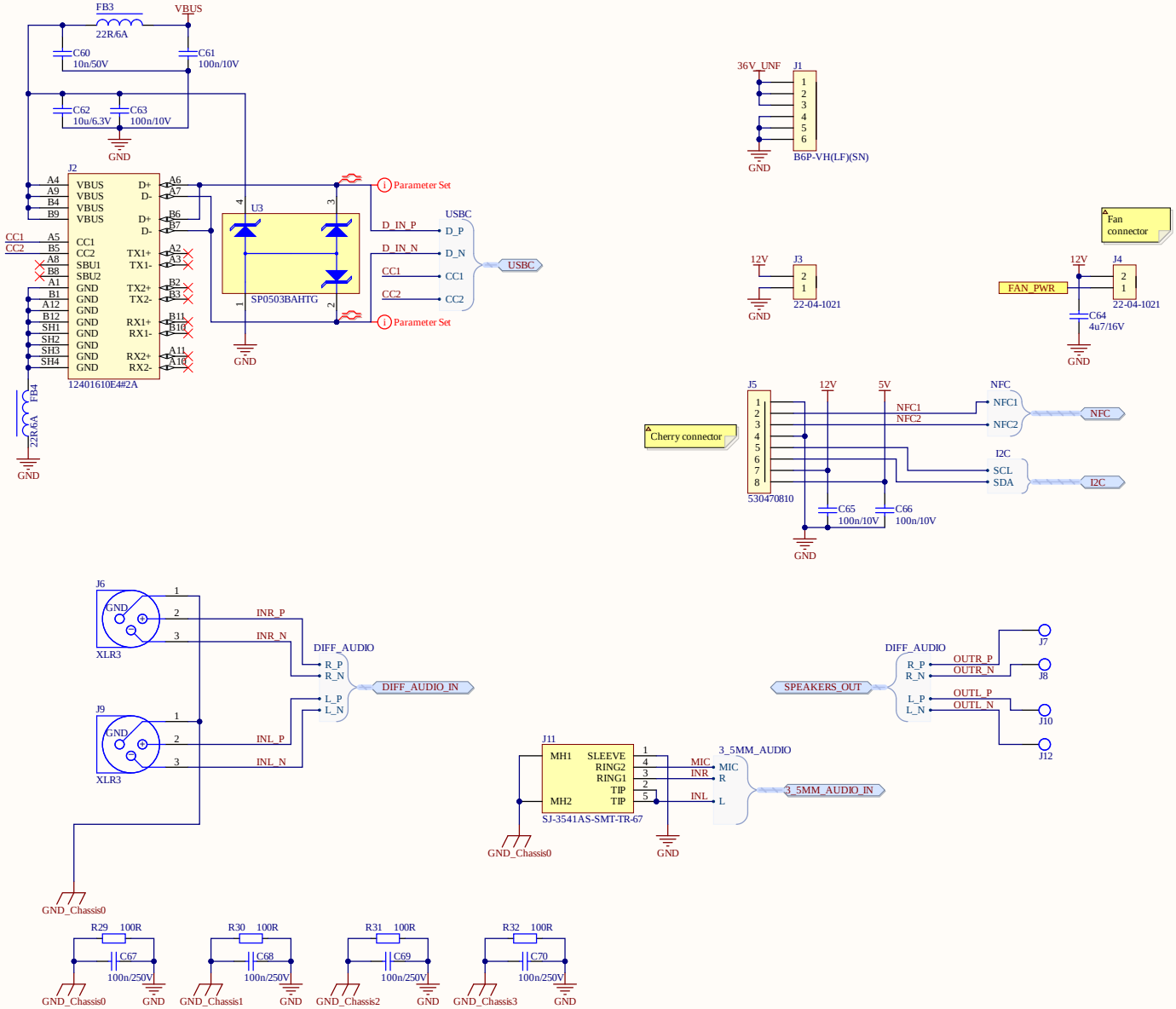

Title	*There Might Be Noise*	Danius Kalvaitis
Number: dk_01017	Revision: v2.0	
Date: 8/29/2024	Sheet 2 of 9	
File: Connectors.SchDoc	Author Danius Kalvaitis	

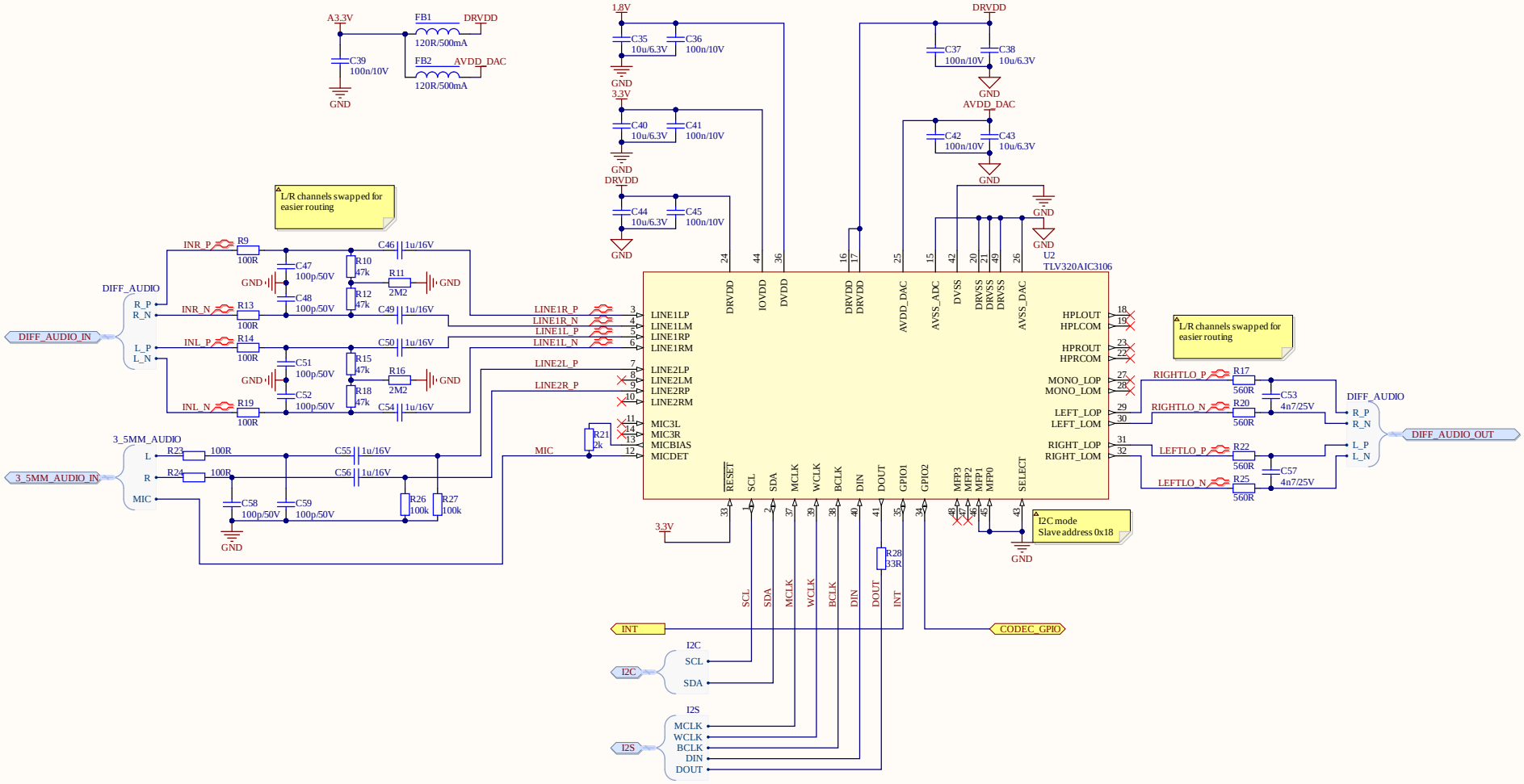

Title	*There Might Be Noise*
Number: dk_01017	Revision: v2.0
Date: 8/29/2024	Sheet 3 of 9
File: Codec.SchDoc	Author Danius Kalvaitis

Danius Kalvaitis

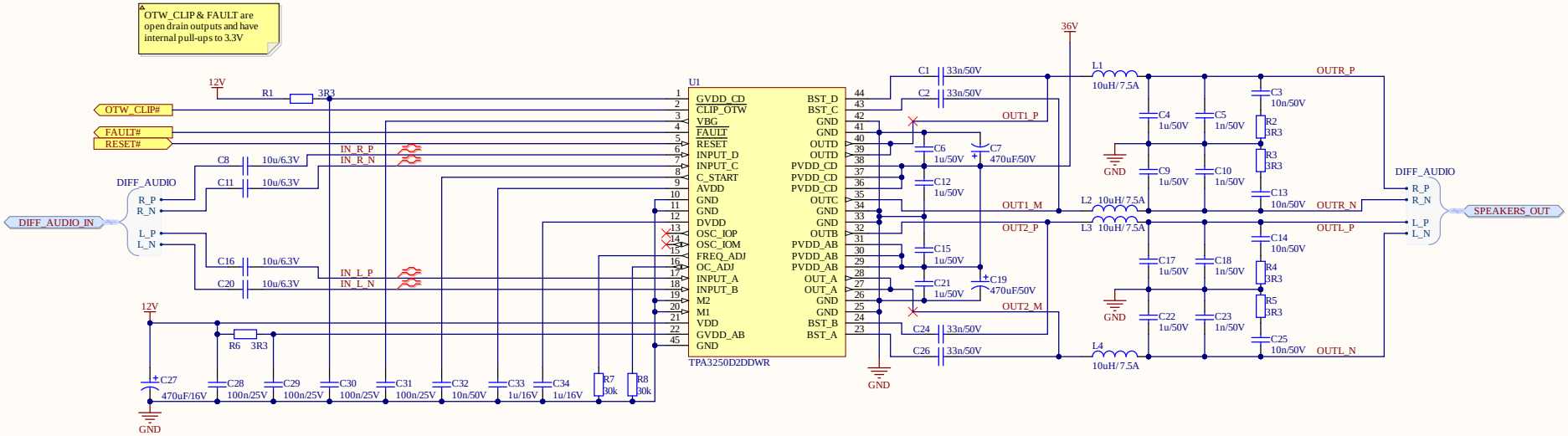

Title	*There Might Be Noise*	Danius Kalvaitis
Number: dk_01017	Revision: v2.0	
Date: 8/29/2024	Sheet 4 of 9	
File: Amplifier.SchDoc	Author Danius Kalvaitis	

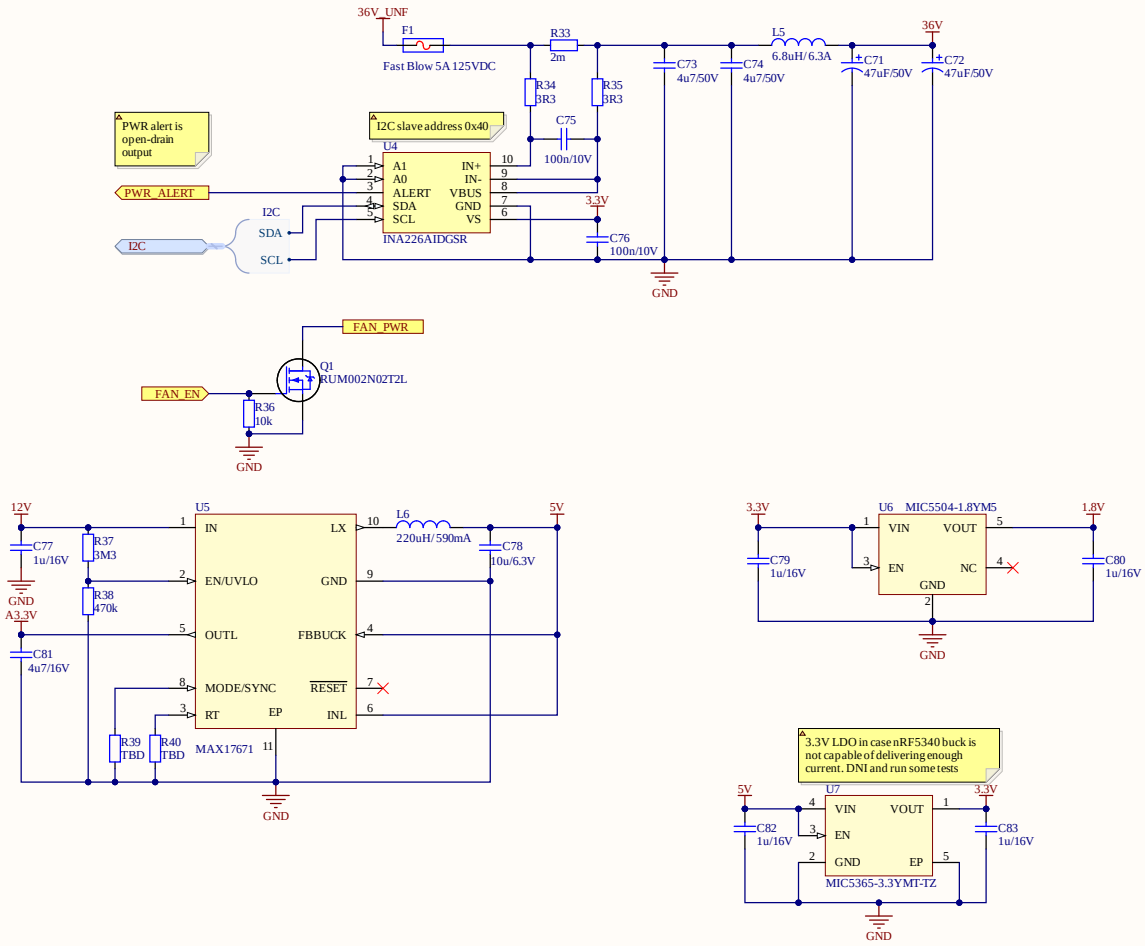

Title	*There Might Be Noise*	Danius Kalvaitis
Number: dk_01017	Revision: v2.0	
Date: 8/29/2024	Sheet 5 of 9	
File: Power.SchDoc	Author Danius Kalvaitis	

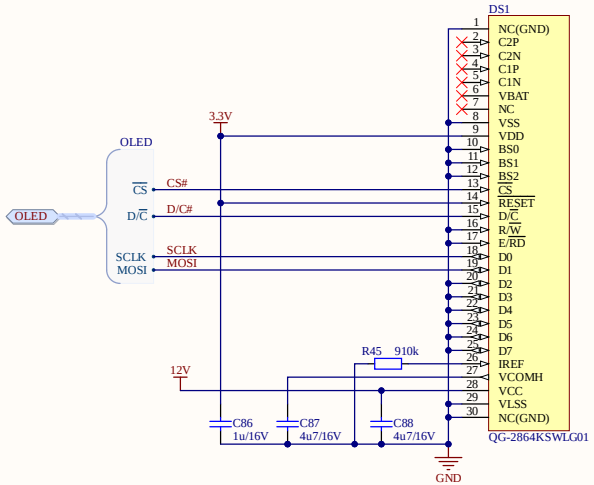

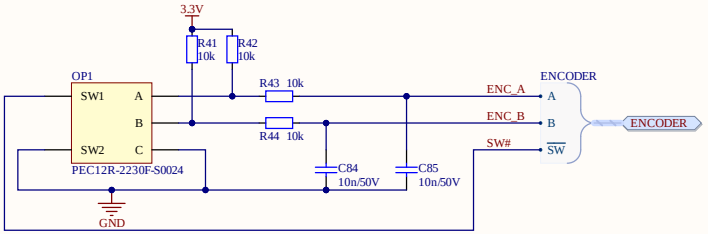

Title	*There Might Be Noise*
Number: dk_01017	Revision: v2.0
Date: 8/29/2024	Sheet 6 of 9
File: UI.SchDoc	Author Danius Kalvaitis

Danius Kalvaitis

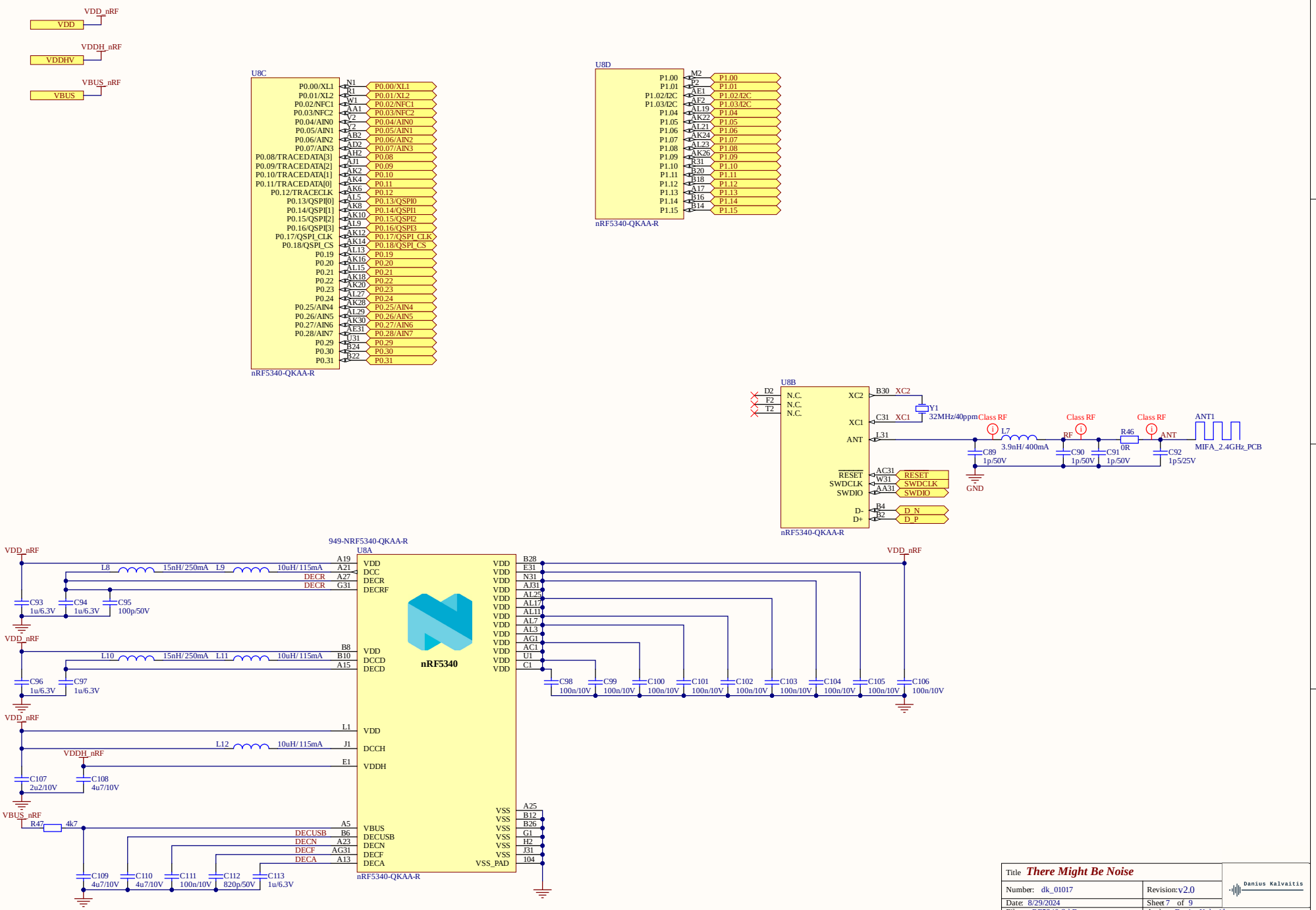

Title	*There Might Be Noise*
Number: dk_01017	Revision: v2.0
Date: 8/29/2024	Sheet 7 of 9
File: nRF5340.SchDoc	Author Danius Kalvaitis

Danius Kalvaitis

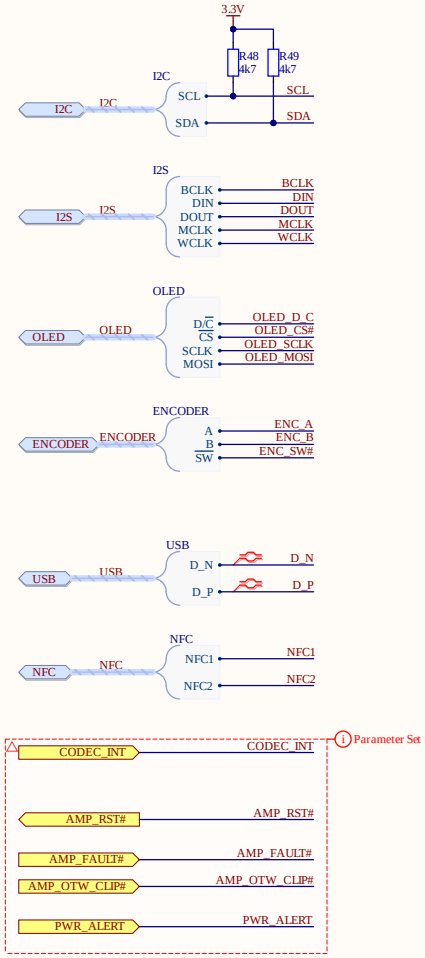

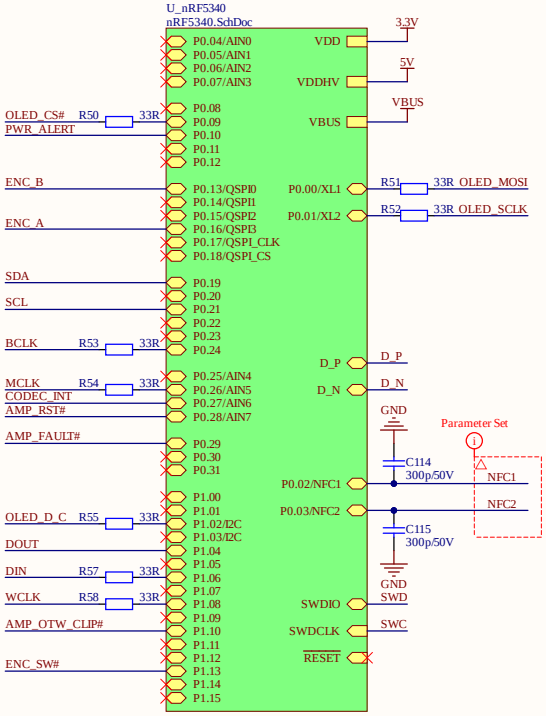

Title	*There Might Be Noise*	Danius Kalvaitis
Number: dk_01017	Revision: v2.0	
Date: 8/29/2024	Sheet 8 of 9	
File: Microcontroller.SchDoc	Author: Danius Kalvaitis	

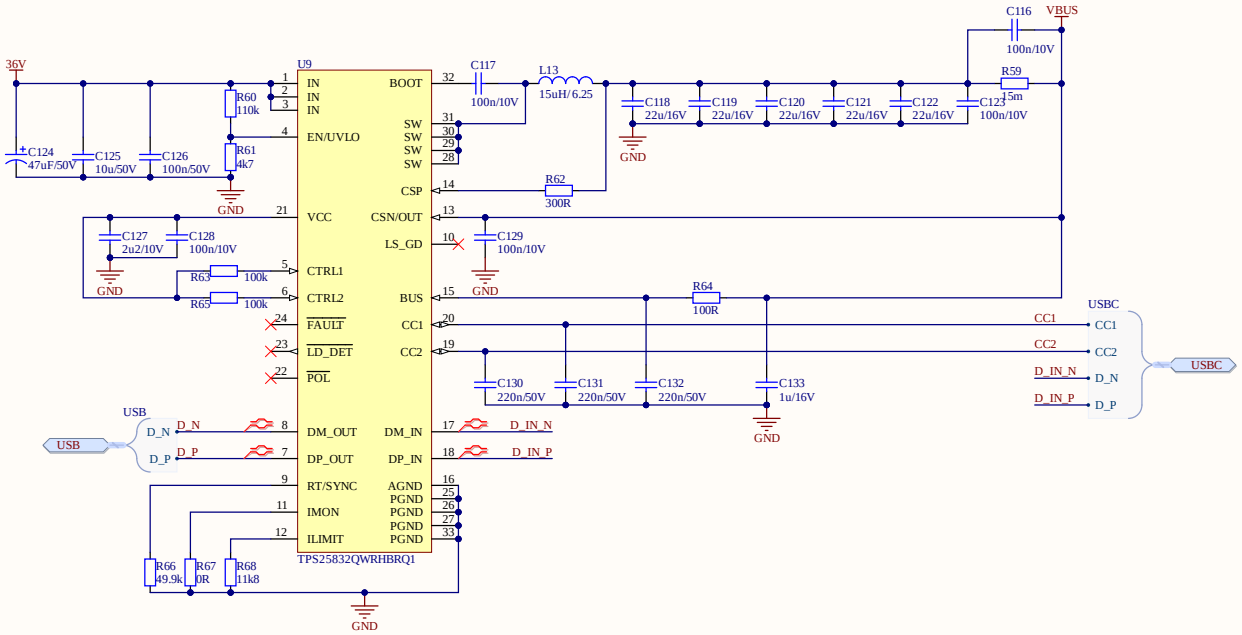

Title	*There Might Be Noise*
Number: dk_01017	Revision: v2.0
Date: 8/29/2024	Sheet 9 of 9
File: USBCharger.SchDoc	Author Danius Kalvaitis

Danius Kalvaitis

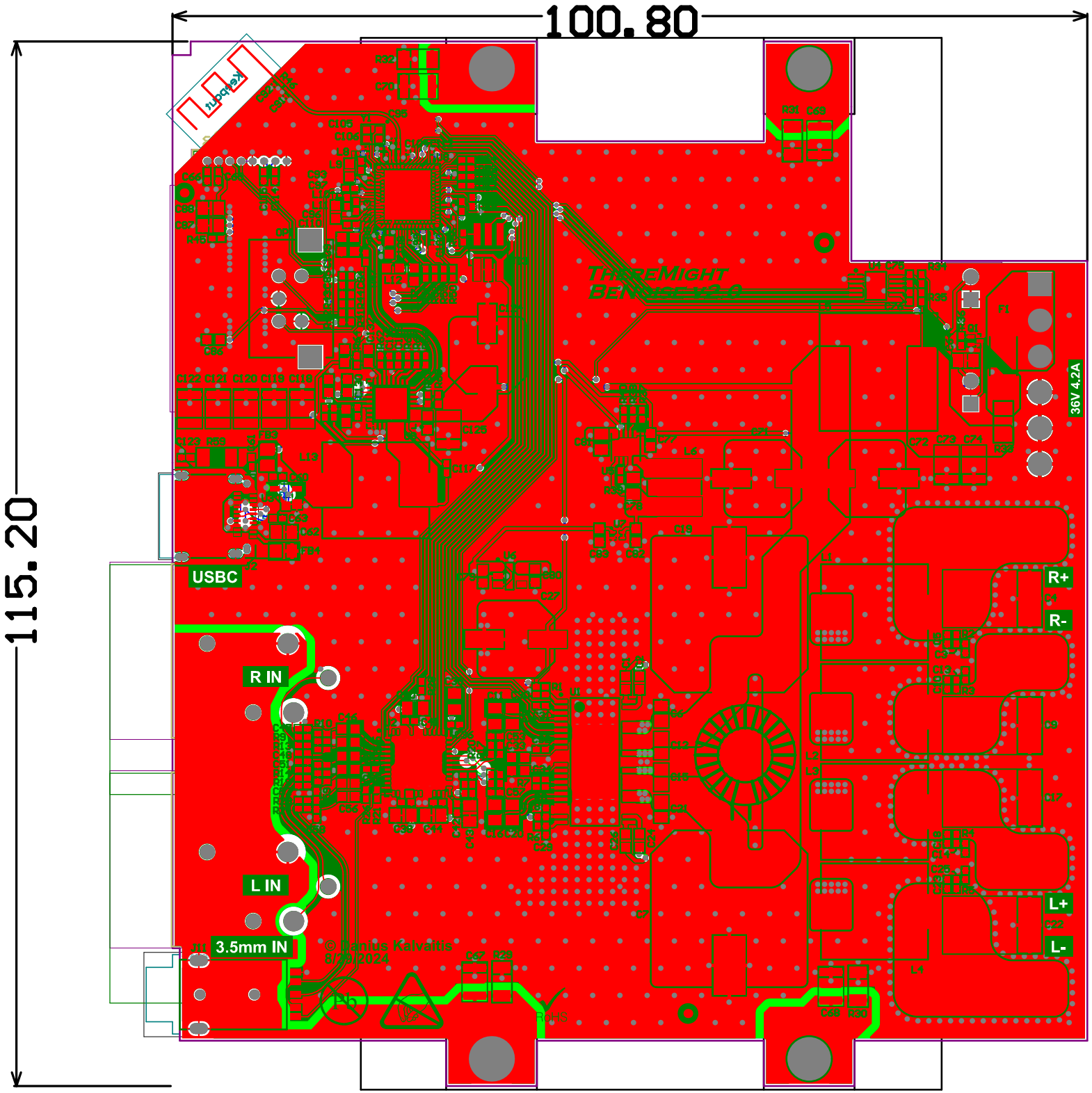
100.80
115.20
USBC
R IN
L IN
3.5mm IN
R+
R-
L+
L-
36V 4.2A
© Janis Kalvāitis
8/9/2024
RoHS