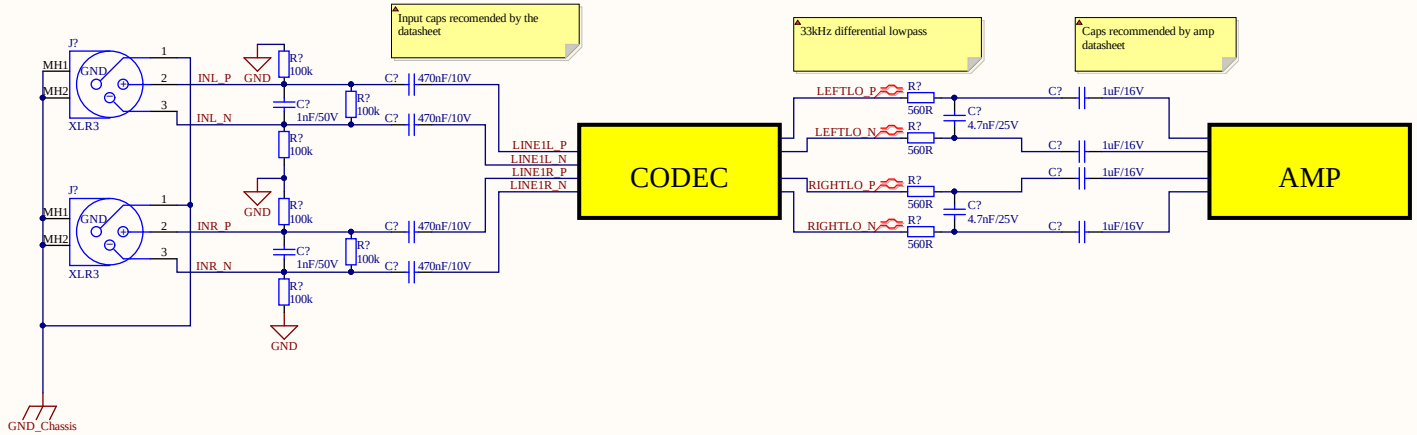

Title *			
Size: A3	Number: *	Revision: *	
Date: 4/13/2020	Time: 12:48:34 PM	Sheet * of *	
File: C:\Users\Public\Documents\Altium\Projects\ThereMightBeNoise\AudioPath.SchDoc			