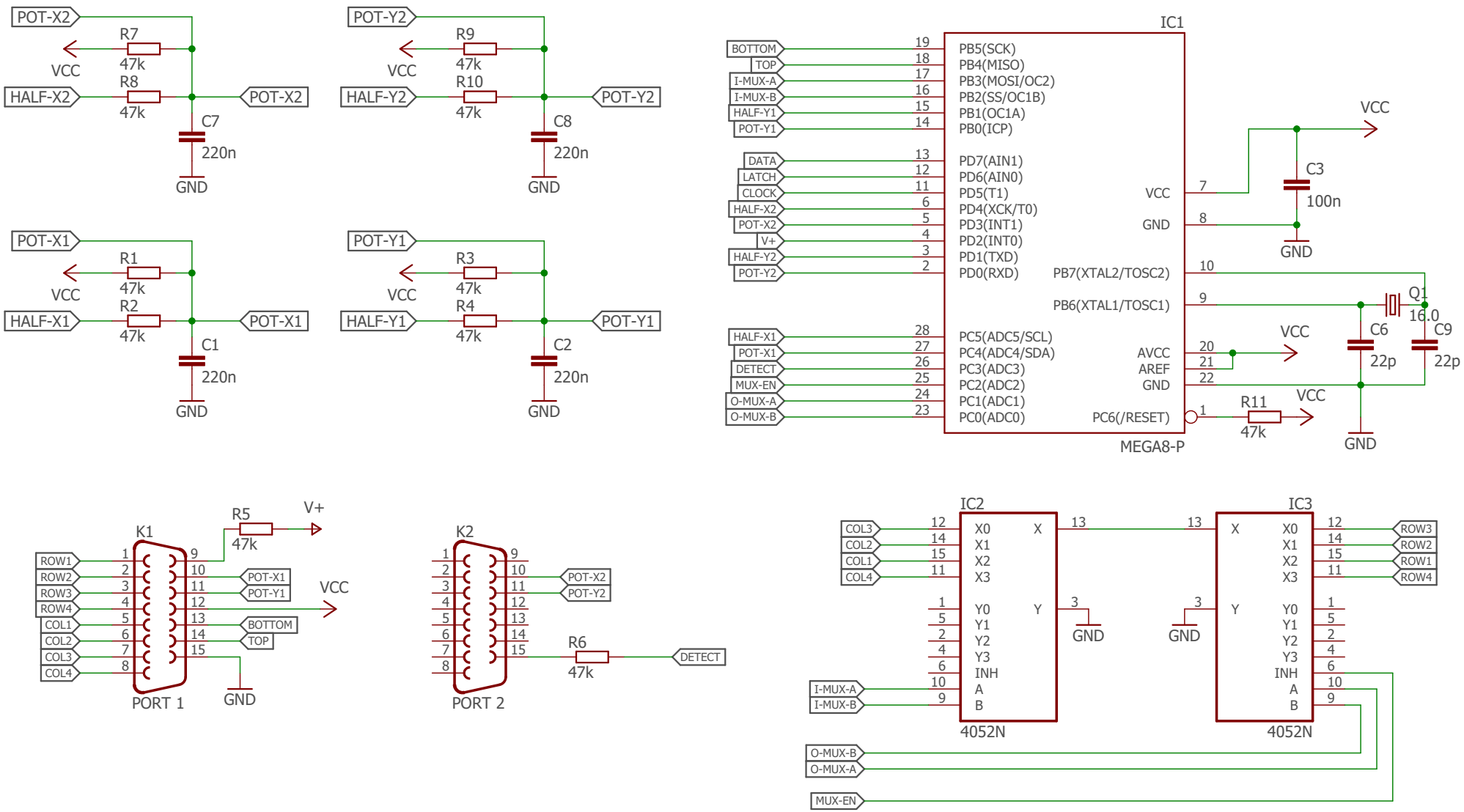

SNES controller adapter for ATARI 5200

Provides dual controller functionality for games lile Robotron 2084 as well as full keyboard support: Keys 0..9, *, #, START, PAUSE and RESET

Danjovic 2020

Murray

01/10/2020 01:18

Sheet: 1/1