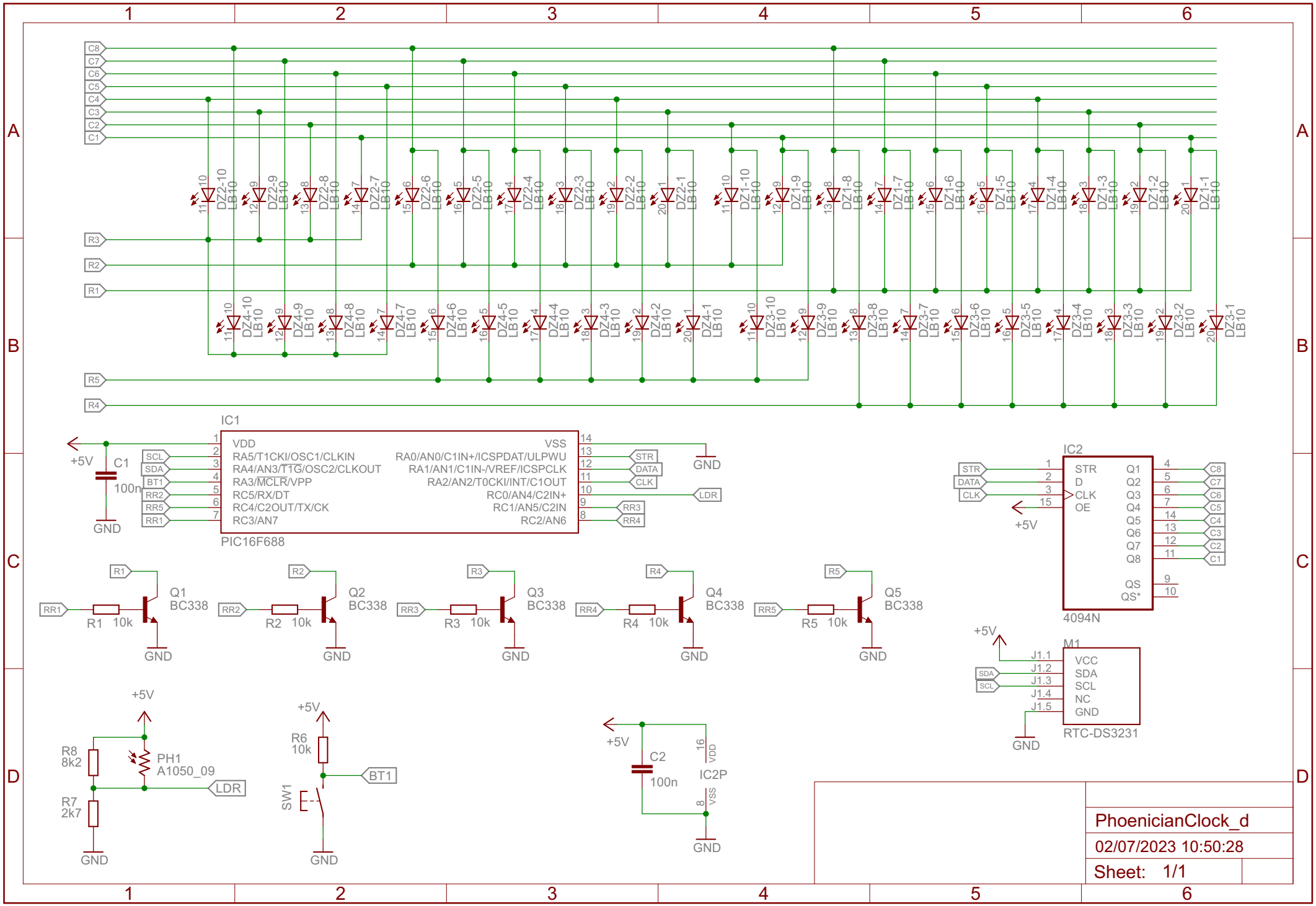
C8
C7
C6
C5
C4
C3
C2
C1
R3
R2
R1
R5
R4
DZ2-10 LB10
DZ2-9 LB10
DZ2-8 LB10
DZ2-7 LB10
DZ2-6 LB10
DZ2-5 LB10
DZ2-4 LB10
DZ2-3 LB10
DZ2-2 LB10
DZ2-1 LB10
DZ1-10 LB10
DZ1-9 LB10
DZ1-8 LB10
DZ1-7 LB10
DZ1-6 LB10
DZ1-5 LB10
DZ1-4 LB10
DZ1-3 LB10
DZ1-2 LB10
DZ1-1 LB10
DZ4-10 LB10
DZ4-9 LB10
DZ4-8 LB10
DZ4-7 LB10
DZ4-6 LB10
DZ4-5 LB10
DZ4-4 LB10
DZ4-3 LB10
DZ4-2 LB10
DZ4-1 LB10
DZ3-10 LB10
DZ3-9 LB10
DZ3-8 LB10
DZ3-7 LB10
DZ3-6 LB10
DZ3-5 LB10
DZ3-4 LB10
DZ3-3 LB10
DZ3-2 LB10
DZ3-1 LB10
IC1
+5V
C1
100n
GND
SCL
SDA
BT1
RR2
RR5
RR1
VDD
RA5/T1CKI/OSC1/CLKIN
RA4/AN3/T1G/OSC2/CLKOUT
RA3/MCLR/VPP
RC5/RX/DT
RC4/C2OUT/TX/CK
RC3/AN7
VSS
RA0/AN0/C1IN+/ICSPDAT/ULPWU
RA1/AN1/C1IN-/VREF/ICSPCLK
RA2/AN2/T0CKI/INT/C1OUT
RC0/AN4/C2IN+
RC1/AN5/C2IN
RC2/AN6
STR
DATA
CLK
LDR
RR3
RR4
PIC16F688
IC2
STR
DATA
CLK
+5V
D
OE
Q1
Q2
Q3
Q4
Q5
Q6
Q7
Q8
QS
QS*
C8
C7
C6
C5
C4
C3
C2
C1
4094N
Q1
BC338
RR1
R1 10k
Q2
BC338
RR2
R2 10k
Q3
BC338
RR3
R3 10k
Q4
BC338
RR4
R4 10k
Q5
BC338
RR5
R5 10k
M1
J1.1
J1.2
J1.3
J1.4
J1.5
VCC
SDA
SCL
NC
GND
RTC-DS3231
R8
8k2
PH1
A1050_09
R7
2k7
R6
10k
SW1
C2
100n
IC2P
VDD
VSS
PhoenicianClock_d
02/07/2023 10:50:28
Sheet: 1/1