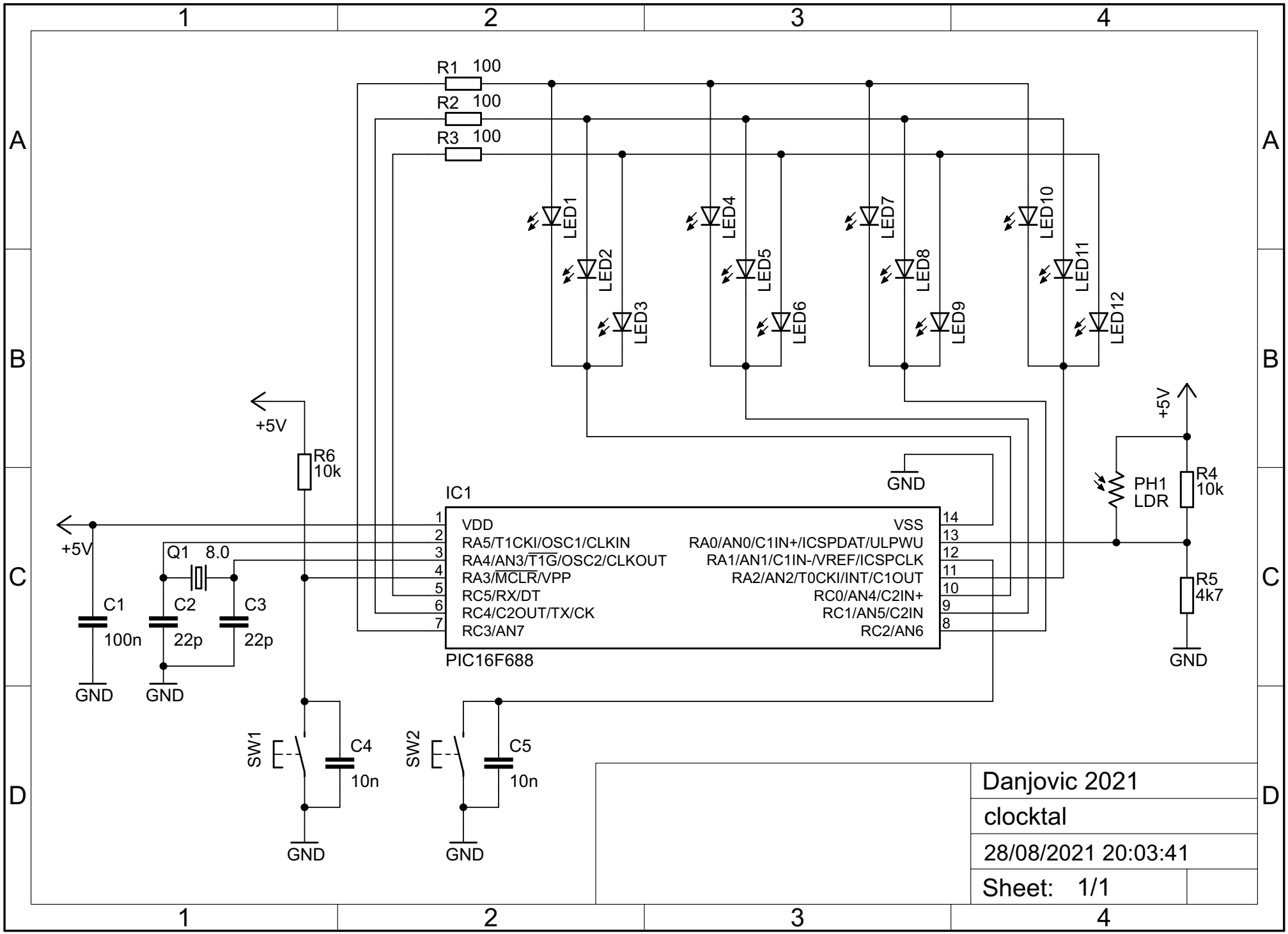
R1 100
R2 100
R3 100
LED1
LED2
LED3
LED4
LED5
LED6
LED7
LED8
LED9
LED10
LED11
LED12
+5V
R6
10k
IC1
GND
PH1
LDR
R4
10k
R5
4k7
VDD
RA5/T1CKI/OSC1/CLKIN
RA4/AN3/T1G/OSC2/CLKOUT
RA3/MCLR/VPP
RC5/RX/DT
RC4/C2OUT/TX/CK
RC3/AN7
VSS
RA0/AN0/C1IN+/ICSPDAT/ULPWU
RA1/AN1/C1IN-/VREF/ICSPCLK
RA2/AN2/T0CKI/INT/C1OUT
RC0/AN4/C2IN+
RC1/AN5/C2IN
RC2/AN6
PIC16F688
Q1 8.0
C1
100n
C2
22p
C3
22p
SW1
C4
10n
SW2
C5
10n
Danjovic 2021
clocktal
28/08/2021 20:03:41
Sheet: 1/1