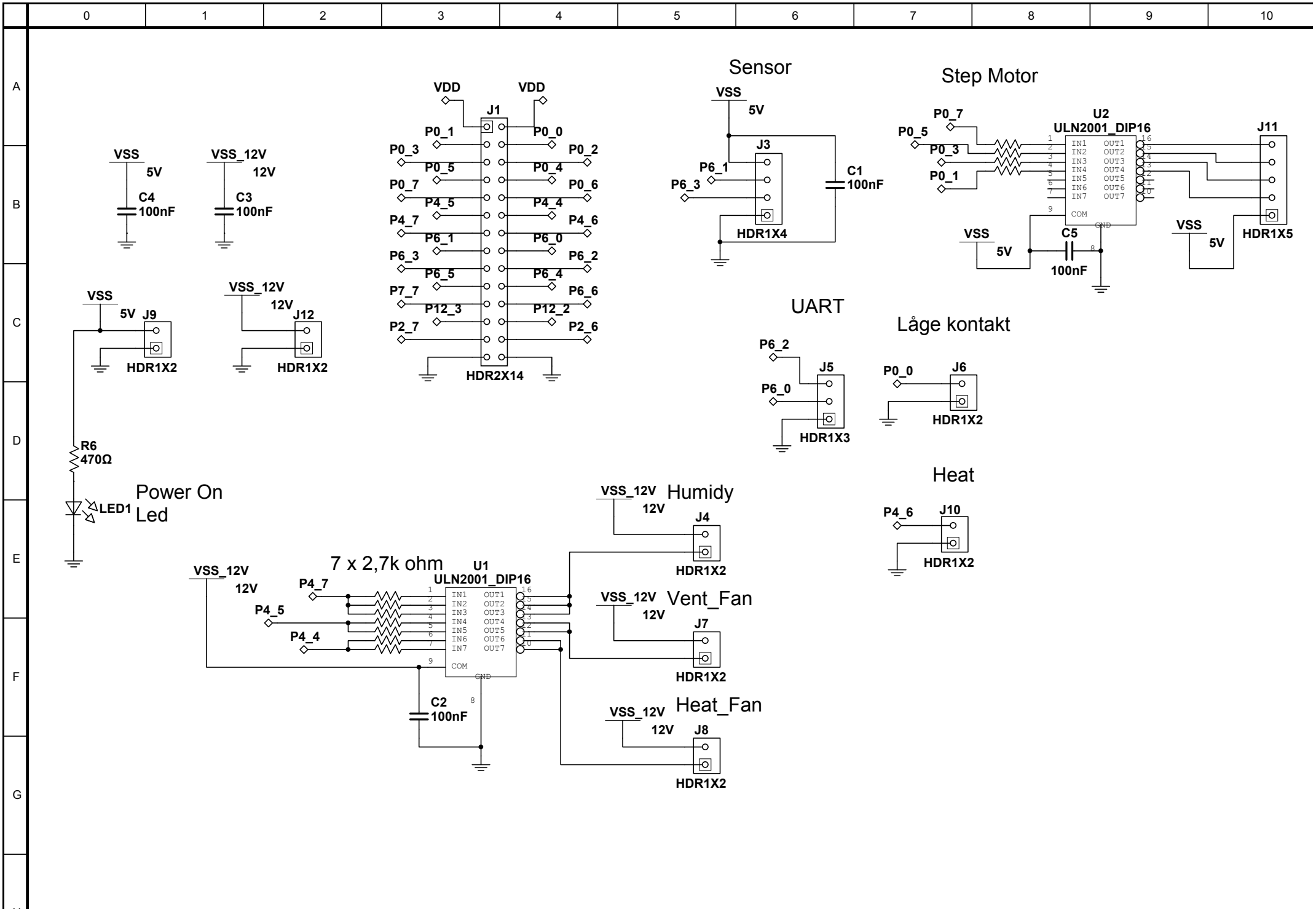
Sensor
Step Motor
UART
Låge kontakt
Heat
Power On Led
Humidy
Vent_Fan
Heat_Fan
7 x 2,7k ohm
VDD
VSS
5V
VSS_12V
12V
C4 100nF
C3 100nF
J1
HDR2X14
J3
HDR1X4
C1 100nF
U2
ULN2001_DIP16
J11
HDR1X5
C5 100nF
J9
HDR1X2
J12
HDR1X2
J5
HDR1X3
J6
HDR1X2
R6 470Ω
LED1
J10
HDR1X2
J4
HDR1X2
U1
ULN2001_DIP16
C2 100nF
J7
HDR1X2
J8
HDR1X2
P0_1
P0_3
P0_5
P0_7
P4_5
P4_7
P6_1
P6_3
P6_5
P7_7
P12_3
P2_7
P0_0
P0_2
P0_4
P0_6
P4_4
P4_6
P6_0
P6_2
P6_4
P6_6
P12_2
P2_6
P6_2
P6_0
P0_0
P4_6
P4_7
P4_5
P4_4
IN1 IN2 IN3 IN4 IN5 IN6 IN7
OUT1 OUT2 OUT3 OUT4 OUT5 OUT6 OUT7
COM
GND