FRONT-END POWER PROTECTION SYSTEM

Discrete 12V DC Safeguard with Soft-Start Logic

TABLE OF CONTENTS

- Abstract
- Problem Statement
- Project Overview
- Design Objectives
- System Architecture
- Circuit Operation
- Circuit Schematic
- Tools & Technologies
- Design Calculations & Engineering Decisions
- Component Selection & Justification
- Bill of Materials (BoM)
- Simulation Setup
- Performance Analysis
- Real-World Consideration
- Limitations
- Future Improvements
- Design Evolution
- Conclusion
- References

1. Abstract

An LTspice-validated **12V DC front-end protection circuit** designed to shield sensitive electronics using a discrete P-channel MOSFET topology. The system integrates **13.9V over-voltage protection** with hysteresis, reverse polarity safety, and a controlled **10–13 ms soft-start** to mitigate inrush current. By avoiding integrated IC solutions, the project demonstrates a deep-dive into the fundamental trade-offs of analog power management, transient response, and circuit stability.

2. Problem Statement

Modern 12V electronic systems—including embedded controllers, communication devices, and analog subsystems—typically operate within a narrow voltage range (**~11–13.2V**). Despite being powered by regulated DC supplies, these systems remain highly vulnerable to several real-world electrical faults:

- **Over-Voltage Conditions:** Triggered by regulator failure, supply overshoot, or transient spikes that exceed safe operating limits.
- **Reverse Polarity Connection:** Accidental incorrect supply connections during installation or maintenance.
- **High Inrush Current:** Rapid charging of decoupling capacitors during startup, which stresses both the power path and the load components.

Even short-duration over-voltage events can exceed the absolute maximum ratings (typically **~15V**) of downstream ICs, leading to immediate degradation or permanent failure. Furthermore, while integrated protection ICs (e.g., hot-swap controllers) are available, they often act as "black boxes," abstracting away the underlying analog behaviors and transient responses.

This project addresses the need for a **transparent, discrete protection solution** that provides robust fault protection while exposing the internal design trade-offs, non-ideal component behaviors, and real-world stability challenges inherent in power electronics.

3. Project Overview

This project presents the design and simulation of a **12V DC power protection circuit** intended for low-power electronic systems. The circuit acts as a front-end protection module placed between a DC power source and a sensitive load, ensuring safe and controlled power delivery under both normal and fault conditions.

The design integrates multiple protection features into a single discrete implementation:

- **Reverse Polarity Protection:** Prevents damage from incorrect supply connections.
- **Over-Voltage Protection (OVP):** Features a cutoff threshold of approximately **13.9V**.
- **Hysteresis (~0.6V):** Ensures stable switching and prevents chatter.
- **Soft-Start Control (~10–13ms):** Limits inrush current during startup and recovery.
- **High-Speed Gate-Drive:** Ensures rapid MOSFET turn-off during fault conditions.

The circuit is built using a **high-side P-channel MOSFET** switching topology, controlled by a comparator-based decision stage and supported by analog feedback networks.

The primary objective of this project is not only functional implementation but also to explore real-world analog design challenges such as non-ideal component behavior, transient response, stability, thermal considerations, and protection trade-offs.

The design was developed and validated entirely through **LTspice simulation**, with extensive testing under multiple conditions including load variation, over-voltage events, and reverse polarity scenarios. This project demonstrates a practical and engineering-focused approach to power protection, emphasizing architectural reasoning and empirical validation rather than relying on integrated protection IC solutions.

4. Design Objectives

The circuit was designed with the following key objectives:

1. **Reverse Polarity Protection:** Ensure that the circuit and connected load are protected against accidental reversal of supply polarity, preventing component damage.
2. **Over-Voltage Protection (OVP):** Detect and disconnect the load when the input voltage exceeds a predefined threshold.
    - **Target cutoff voltage**: ≈ 13.9 V
    - **Purpose**: Protect downstream electronics from unsafe voltage levels, particularly those with ~15 V absolute maximum ratings.
3. **Hysteresis Implementation:** Introduce a controlled hysteresis band to avoid rapid switching (chatter) near the threshold.
    - **Target hysteresis band:** ≈ 0.6 V
    - **Result:** Ensures a clean transition between ON and OFF states.
4. **Soft-Start Control:** Gradually ramp up the output voltage during startup and recovery to limit inrush current.
    - **Target soft-start duration:** ≈ 10–13 ms
    - **Impact:** Reduces stress on both the MOSFET and the load; designed to be largely load-independent for consistent behavior.
5. **Fast Protection Response:** Ensure rapid system response to fault conditions through a dedicated gate-drive path.
    - **Electronic response time:** ≈ 1.6 µs (includes comparator propagation delay and MOSFET gate transition).
    - **Note:** Output voltage decay is governed by load and output capacitance rather than switching delay.
6. **Target Operating Conditions:**
    - **Nominal input voltage:** 12 V DC
    - **Intended load current:** 2–3 A (continuous, without heatsinking).
    - **Application:** Suitable for low-power regulated 12 V electronic systems.

7. **Design Transparency and Learning Focus:** Utilize a fully discrete approach (comparator + MOSFET + passive components) instead of integrated solutions to enable deeper understanding of:
    - Analog decision-making and feedback behavior.
    - Non-ideal effects and power device dynamics.
    - Architectural reasoning and iterative improvement.

5. System Architecture

The circuit can be understood as a combination of four functional blocks, each responsible for a specific aspect of protection and control:

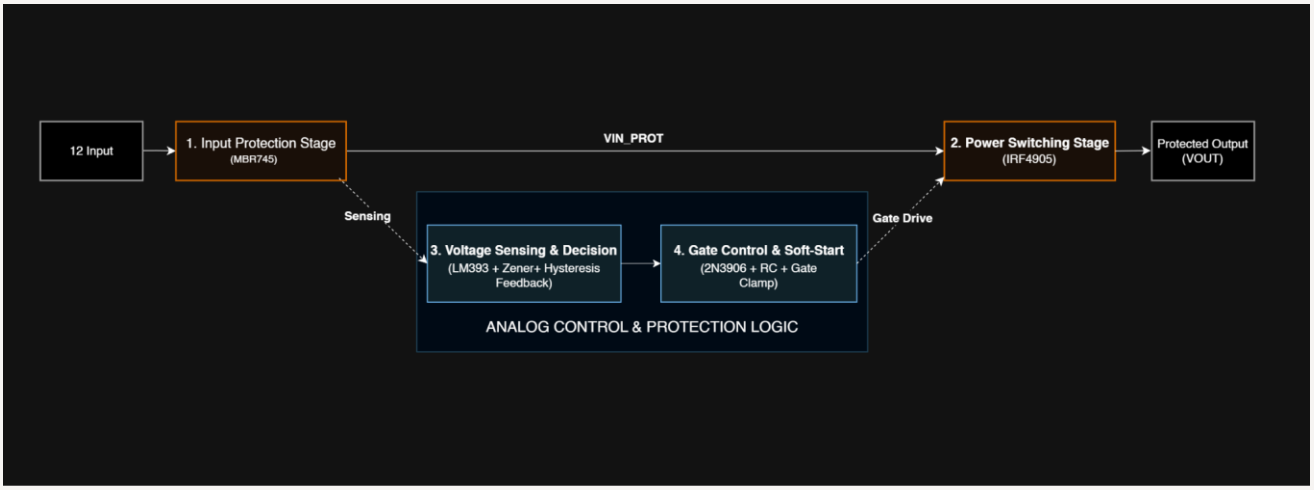

1. Input Protection Stage

Provides reverse polarity protection using a series **Schottky diode (MBR745)**, ensuring that incorrect supply connection does not damage downstream components.

2. Power Switching Stage

A high-side **P-channel MOSFET (IRF4905)** acts as the main power switch.

- **ON state**: Gate pulled low → conducts power to load.
- **OFF state**: Gate pulled high (≈ source) → disconnects load.

3. Voltage Sensing and Decision Stage

Implemented using an **LM393 comparator** with:

- **Resistive divider (R1, R2)**: Senses V_{IN_PROT} .
- **Zener-based reference (~5V region)**: Provides comparison baseline.
- **Hysteresis network (R5)**: Ensures stable switching.

4. Gate Control and Soft-Start Network

Controls MOSFET gate behavior:

- **PNP transistor (2N3906)**: Fast gate pull-up during fault (turn OFF).
- **RC network (R9, C3, Rg)**: Controlled gate discharge (soft-start).
- **Zener clamp (15V)**: Protects MOSFET V_{gs} from overvoltage.

These blocks operate together to ensure that power is delivered safely under normal conditions, faults are detected quickly, and transitions are controlled to avoid electrical stress.

6. Circuit Operation

6.1 Normal Operation (Below 13.9 V)

When V_{IN_PROT} is within the safe operating range:

- **Voltage Divider Action:** The input voltage is scaled down by R1 and R2 .
- **Comparator Decision**: The scaled voltage (IN−) is lower than the reference (IN+).
- **Comparator Output**: LM393 output remains HIGH (via pull-up resistor).
- **PNP Transistor State**: High comparator output keeps the PNP transistor OFF.
- **MOSFET Gate Behavior**: Gate is pulled down gradually through the RC network (R8 + R9 + C3).
- **MOSFET Conduction**: V_{gs} becomes sufficiently negative → MOSFET turns ON.

- **Output**: $V_{OUT} \approx V_{IN_PROT}$ with minimal voltage drop.

Result: The system operates normally and supplies power to the load.

6.2 Startup (Soft-Start Behavior)

During initial power application:

1. **Gate Initial Condition**: The MOSFET gate is initially near source potential (OFF state).
2. **RC-Controlled Discharge**: The gate discharges gradually through R8 and R9 while C3 controls the rate.
3. **MOSFET Transition**: As V_{gs} becomes more negative, the MOSFET enters its linear region.
4. **Controlled Output Rise**: V_{OUT} increases gradually instead of stepping abruptly.
5. **Miller Effect Influence**: The MOSFET's internal capacitances (especially C_{rss}) further smooth the transition.

Result: A controlled output ramp (~10–13 ms) that limits inrush current.

6.3 Over-Voltage Detection (≈13.9 V)

When V_{IN_PROT} rises:

1. **Divider Output Increases**: The sensed voltage at IN− increases proportionally.
2. **Threshold Crossing**: At ≈13.9 V, IN− exceeds the reference voltage (IN+).
3. **Comparator Switching**: The LM393 output transitions from HIGH to LOW.
4. **Propagation Delay**: This transition occurs within ~1.3–1.6 µs from threshold crossing.

Result: Fault condition is detected rapidly.

6.4 Cutoff Action (Fast Turn-Off)

Once the comparator output goes **LOW**:

1. **PNP Activation**: The LOW output drives the PNP transistor ON.
2. **Gate Pull-Up**: The transistor quickly pulls the MOSFET gate toward V_{IN_PROT}.
3. **Vgs Reduction**: V_{gs} approaches 0 V → MOSFET turns OFF.
4. **Load Disconnection**: Current flow to the load is interrupted.
5. **Output Behavior**: V_{OUT} decays gradually due to load resistance and output capacitance (Cload).

Important Note: The electrical switching (MOSFET turn-off) occurs in microseconds, but the output voltage fall is governed by load and capacitance (soft-stop effect).

6.5 Recovery (Hysteresis Action ≈13.3 V)

As V_{IN_PROT} decreases:

1. **Hysteresis Effect**: Due to positive feedback (R5), the release threshold is lower (~13.3 V).
2. **Comparator Reset**: When V_{IN_PROT} falls below this level, comparator output returns HIGH.
3. **PNP Turns OFF**: Gate pull-up path is removed.
4. **Gate Discharge Resumes**: Gate voltage decreases gradually via RC network.
5. **MOSFET Turns ON**: Soft-start sequence repeats.

Result: Stable recovery without oscillation or chatter.

7. Circuit Schematic

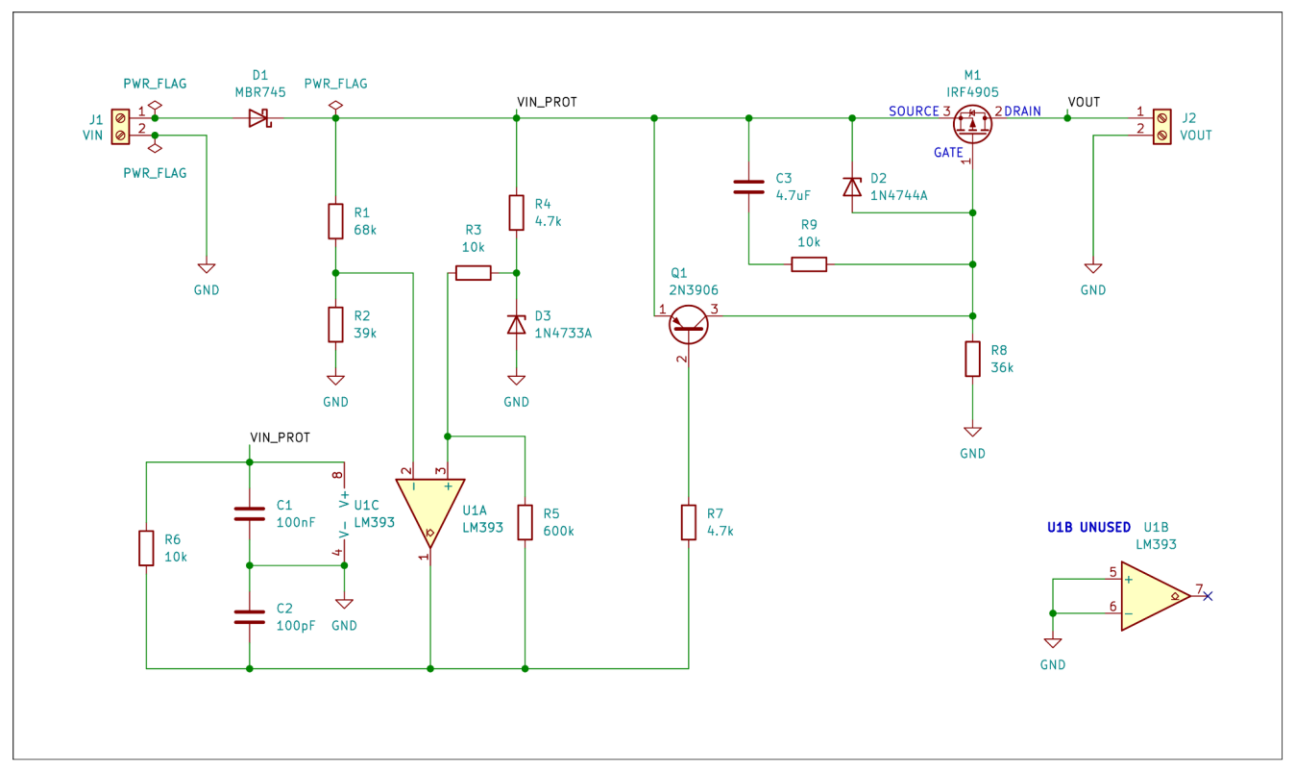

8. Tools & Technologies

The project was developed and validated using the following tools:

- **LTspice 24:** Used for circuit simulation, transient analysis, and validation of dynamic behavior under different operating conditions.
- **KiCad 9.0:** Used for schematic capture and creation of a clean, professional circuit diagram.
- **draw.io:** Used to create the system-level block diagram for visual representation of circuit architecture.

These tools enabled iterative design, debugging, and performance evaluation without requiring physical hardware implementation.

9. Design Calculations & Engineering Decisions

9.1 Voltage Divider & Trip Threshold

The over-voltage threshold is determined using a resistive voltage divider formed by **R1** and **R2**.

- **R1:** 68 kΩ (upper resistor)
- **R2:** 39 kΩ (lower resistor)

The divider scales V_{IN_PROT} to a lower voltage suitable for comparison with the reference. The divider output voltage is calculated as:

$$V_{div} = V_{IN_PROT} \cdot \frac{R_2}{R_1 + R_2}$$

Substituting the values:

$$V_{div} = V_{IN_PROT} \cdot \frac{39}{68 + 39}$$

$$V_{div} \approx V_{IN_PROT} \cdot 0.364$$

At the intended trip point:

$$V_{div} \approx 13.9 \text{ V} \cdot 0.364 \approx 5.06 \text{ V}$$

9.2 Reference Voltage (Zener Behavior)

The reference voltage is generated using **D3** (1N4733A, nominal 5.1 V Zener) with series bias resistor **R4**.

- **R4:** 4.7 kΩ (bias resistor)
- **D3:** 1N4733A (5.1 V nominal)

However, the Zener voltage depends on current.

At $V_{IN_PROT} \approx 13.9\ \mathrm{V}$ **:**

$$I_z = \frac{V_{IN_PROT} - V_z}{R_4} \approx \frac{13.9 - 4.9}{4.7\ \mathrm{k}} \approx 2\ \mathrm{mA}$$

Note: At this low current, the Zener operates in the knee region, resulting in a lower actual voltage ($V_Z \approx 4.8$ - $4.9\ \mathrm{V}$) rather than the nominal 5.1 V. This explains why the real-world trip voltage differs slightly from ideal calculations.

9.3 Comparator Threshold Matching

The comparator switches when $V(IN\text{-}) \approx V(IN+)$. Based on the measured Zener behavior:

$$0.364 \cdot V_{IN_PROT} \approx 4.9\ \mathrm{V}$$

$$V_{IN_PROT} \approx \frac{4.9}{0.364} \approx 13.46\ \mathrm{V}\ (\mathrm{Ideal})$$

The deviation to the measured **~13.9 V** is attributed to component tolerances (Zener and resistors), comparator input offset, and the loading effect of the hysteresis network.

9.4 Hysteresis Design (≈0.6 V)

Hysteresis is implemented using **R5** (600 kΩ), feeding the output back to the non-inverting input. This creates two distinct thresholds:

- **Trip (OFF):** $\approx 13.9\ \mathrm{V}$
- **Release (ON):** $\approx 13.3\ \mathrm{V}$
- **Hysteresis Width:** $\approx 0.6\ \mathrm{V}$

Purpose: Prevents oscillation (chatter) near the threshold, ensures clean switching, and improves system noise immunity.

Note: The exact hysteresis band is influenced by R5 value, divider impedance and comparator output swing. The final value was tuned based on simulation and validation behaviour.

9.5 Soft-Start Timing (RC Network)

Soft-start is controlled by the RC network formed by **R9** and **C3**.

- **R9:** 10 kΩ
- **C3:** 4.7 µF

The theoretical time constant is:

$$\tau = R \cdot C = 10\ \mathrm{k\Omega} \cdot 4.7\ \mu\mathrm{F} = 47\ \mathrm{ms}$$

Engineering Insight: The observed soft-start (~10–13 ms) is shorter than τ because the MOSFET begins conducting as soon as V_{gs} reaches the threshold voltage $(V_{gs(th)})$ rather than waiting for the full RC settling time. Device physics, including the nonlinear gate capacitances (C_{gs}, C_{rss}) & Miller plateau, also influences this ramp.

9.6 Gate Drive Strategy (Fast Turn-Off)

A PNP transistor (**Q1**, 2N3906) is used to rapidly pull the MOSFET gate to V_{IN_PROT} during faults.

1. **Fault Detected:** Comparator output goes LOW.
2. **Q1 Activation:** Q1 turns ON via base resistor **R7** (4.7 kΩ).
3. **Rapid Cutoff:** Gate is pulled high quickly, resulting in $V_{gs} \rightarrow 0$, forcing the MOSFET OFF.

This dual-path design allows for a **fast protection response (~1.6 µs)** while maintaining a **controlled startup** via the RC network.

9.7 Gate Protection (Vgs Clamp)

The MOSFET gate is protected by **D2** (1N4744A, 15 V Zener).

- **Function:** Limits maximum negative V_{gs} to 15 V.
- **Safety:** Ensures $|V_{gs}|$ remains below the 20 V absolute maximum limit of the **IRF4905**.
- **Normal State:** $V_{gs} \approx -10\ \mathrm{V}$ (within safe limits); the clamp activates only under abnormal conditions.

10. Component Selection & Justification

The component selection for this design was based on availability, electrical characteristics, and suitability for discrete analog implementation. Each component was chosen to balance performance, simplicity, and real-world behavior.

1. MOSFET (M1 – IRF4905)

A P-channel power MOSFET (IRF4905) is used for high-side switching.

Reasons for selection:

- Low $R_{DS\,(on)}$ (~20 mΩ) for minimal conduction loss.
- High current capability to support >10 A transient loads.
- TO-220 package for good thermal performance.
- Specifically suited for 12 V systems.

Trade-offs:

- Higher gate charge affects switching speed.
- Requires precise gate control to achieve the desired soft-start ramp.

---

2. Schottky Diode (D1 – MBR745)

Used for reverse polarity protection at the input stage.

Reasons for selection:

- High current rating (7.5 A).
- Fast switching characteristics.
- Low forward voltage (typically 0.4–0.5 V).

Trade-offs:

- Voltage drop reduces overall efficiency (observed ~0.3–0.4 V loss).
- Thermal limitation makes this the primary current bottleneck of the module.

---

3. Comparator (U1 – LM393)

Used for voltage detection and high-speed decision-making.

Reasons for selection:

- Open-collector output allows for flexible interfacing with the gate-drive stage.
- Wide supply voltage range.
- Low cost and high availability.
- Proven reliability for analog threshold detection.

Design consideration:

- Requires an external pull-up resistor (R6).
- Requires compensation (C2) to maintain loop stability.

---

4. Zener Diodes

- **D3 (1N4733A – 5.1 V):** Used for stable reference generation.
- **D2 (1N4744A – 15 V):** Used for MOSFET gate-source protection.

Reasons:

- Simple and low-cost alternative to active voltage references.
- Provides adequate accuracy for the protection threshold.
- Gate clamp ensures long-term MOSFET reliability.

Trade-offs:

- Zener voltage varies with bias current (as noted in Section 8.2).
- Less precise than a dedicated TL431 or reference IC.

---

5. PNP Transistor (Q1 – 2N3906)

Used for the fast gate pull-up path during fault conditions.

Reasons:

- Simple, robust implementation for high-speed switching.
- Fast response time to ensure the MOSFET reaches cutoff in microseconds.
- Standard, readily available component.

---

6. Passive Components

Resistors:

- **R1, R2:** Precision voltage divider for sensing .
- **R3:** Reference bias (Rref).
- **R4:** Zener bias resistor (Rz).
- **R5:** Hysteresis control loop.
- **R6:** Comparator output pull-up.
- **R7:** Base current limiting for Q1.
- **R8:** Gate pull-down resistor.
- **R9:** Soft-start timing control.

Capacitors:

- **C1 (100 nF):** Input supply decoupling.
- **C2 (100 pF):** Comparator stability and noise filtering.
- **C3 (4.7 µF):** Controls the RC-based soft-start duration.

The design intentionally utilizes discrete components rather than integrated "black-box" solutions to expose internal behavior and the fundamental trade-offs involved in power electronics design.

11. Bill of Materials (BoM)

Ref	Component	Value / Part No.	Description
M1	PMOS	IRF4905	High-side power MOSFET
Q1	PNP BJT	2N3906	Gate pull-up (fast turn-off)
U1	Comparator	LM393	Dual comparator (single used)
D1	Schottky Diode	MBR745	Reverse polarity protection
D2	Zener Diode	1N4744A (15 V)	Gate-source protection
D3	Zener Diode	1N4733A (5.1 V)	Reference voltage
R1	Resistor	68 kΩ	Voltage divider (Rtop)
R2	Resistor	39 kΩ	Voltage divider (Rbottom)
R3	Resistor	10 kΩ	Reference bias (Rref)
R4	Resistor	4.7 kΩ	Zener bias (Rz)
R5	Resistor	600 kΩ	Hysteresis (Rhys)
R6	Resistor	10 kΩ	Comparator pull-up
R7	Resistor	4.7 kΩ	Base resistor (Q1)
R8	Resistor	36 kΩ	Gate pull-down
R9	Resistor	10 kΩ	Soft-start control
C1	Capacitor	100 nF	Supply decoupling
C2	Capacitor	100 pF	Comparator compensation (Ccomp)
C3	Capacitor	4.7 µF	Soft-start timing (Cg)
J1	Connector	Screw Terminal	Input (VIN)
J2	Connector	Screw Terminal	Output (VOUT)

12. Simulation Setup

The circuit was validated using LTspice transient simulations to ensure stability and reliability across a range of operating environments

1. Input Source Configuration

To evaluate the circuit under dynamic conditions, a **Piecewise Linear (PWL)** voltage source was utilized. This allowed for a precise, scripted sequence of events within a single 500 ms simulation window:

- **The Command :** `PWL(0 0 50m 12 200m 12 350m 15 500m 12)`
- **The Sequence :**
  - **0–50 ms:** Linear ramp from 0 V to 12 V (Testing Soft-Start).
  - **50–200 ms:** Stable 12 V nominal operation.
  - **200–350 ms:** Linear rise to 15 V (Testing Over-Voltage Cutoff).
  - **350–500 ms:** Return to 12 V (Testing Fault Recovery and Auto-Restart).

Stress Testing Variations: Beyond the standard profile, modified PWL commands and specific `.step` directives were used to simulate rapid transients, high-frequency supply noise, and extreme load-switching events to ensure the design's robustness.

---

2. Transient Analysis Parameters

- **Command :** `.tran 0 500m`
- **Step Size :** A maximum timestep of 1 ns was enforced during critical threshold crossings to accurately capture the microsecond-scale propagation delays $(T_{detect}$ & $T_{exec})$.

---

3. Load Conditions

Multiple resistive loads were simulated to evaluate the circuit's performance under varying current demands:

- **10 Ω:** Light load (nominal operation).
- **2 Ω:** Moderate load (thermal stress testing).
- **1 Ω:** Heavy/Transient load (SOA and peak power verification).

The setup was specifically designed to replicate realistic operating and fault conditions, ensuring the design margins are sufficient for physical hardware implementation.

13. Performance Analysis

13.1 Voltage Behavior

At nominal operation:

- **VIN:** 12 V
- **VIN_PROT:** ≈ 11.6–11.7 V
- **VOUT:** ≈ 11.57 V

Voltage drop sources:

- **D1 (Schottky diode):** ~0.3–0.4 V drop.
- **M1 (MOSFET):** Negligible drop (~20–30 mV).

Overall efficiency:

$$\eta \approx \frac{V_{OUT}}{V_{IN}} \approx \frac{11.57}{12} \approx 96.4\%$$

13.2 Soft-Start Behavior

Observed soft-start:

- **Duration:** ≈ 10–13 ms
- **Ramp Profile:** Controlled linear-to-exponential rise of V_{OUT}.
- **Impact:** Effectively limits inrush current during startup and fault recovery.

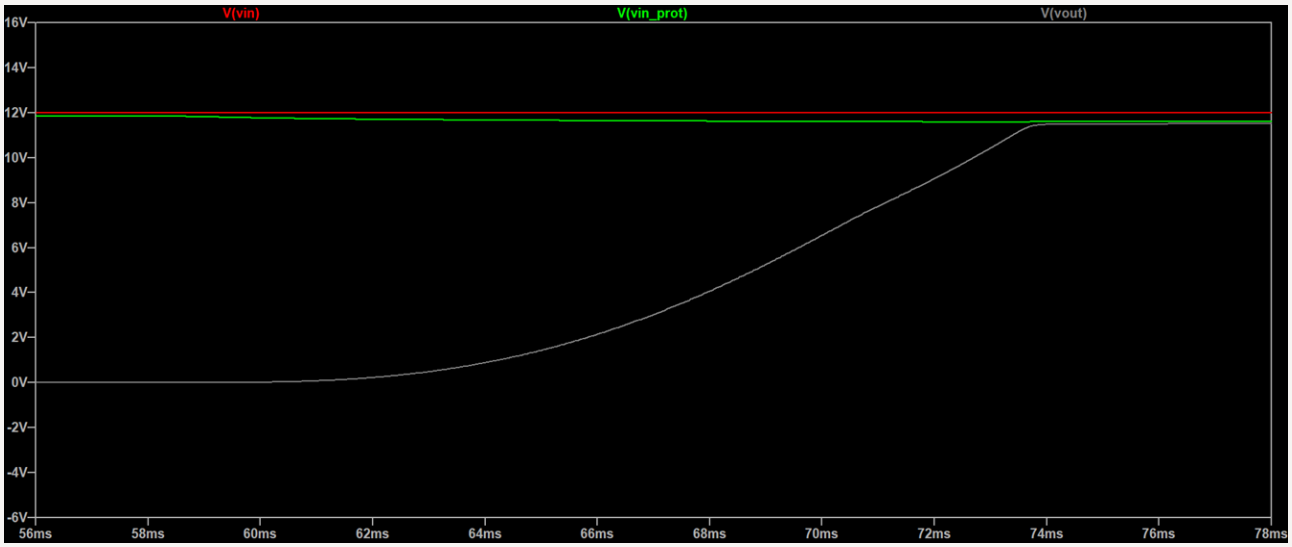

Figure 1: Soft-start ramp (13ms)

The ramp is influenced by the **R9/C3** network, the **M1** gate charge characteristics, and the specific load conditions. The design maintains a consistent startup profile across varying inputs .

13.3 Over-Voltage Protection

Measured behavior:

- **Trip voltage:** ≈ 13.92 V
- **Release voltage:** ≈ 13.29 V
- **Hysteresis:** ≈ 0.6 V

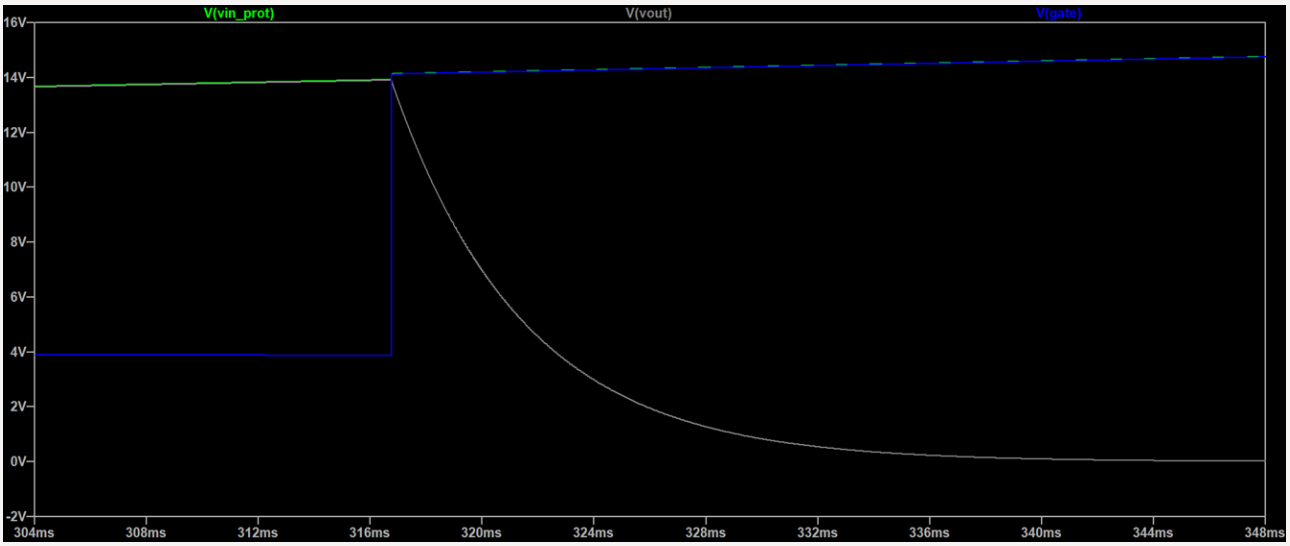

Figure 2: Over-Voltage Cutoff (13.92 V)

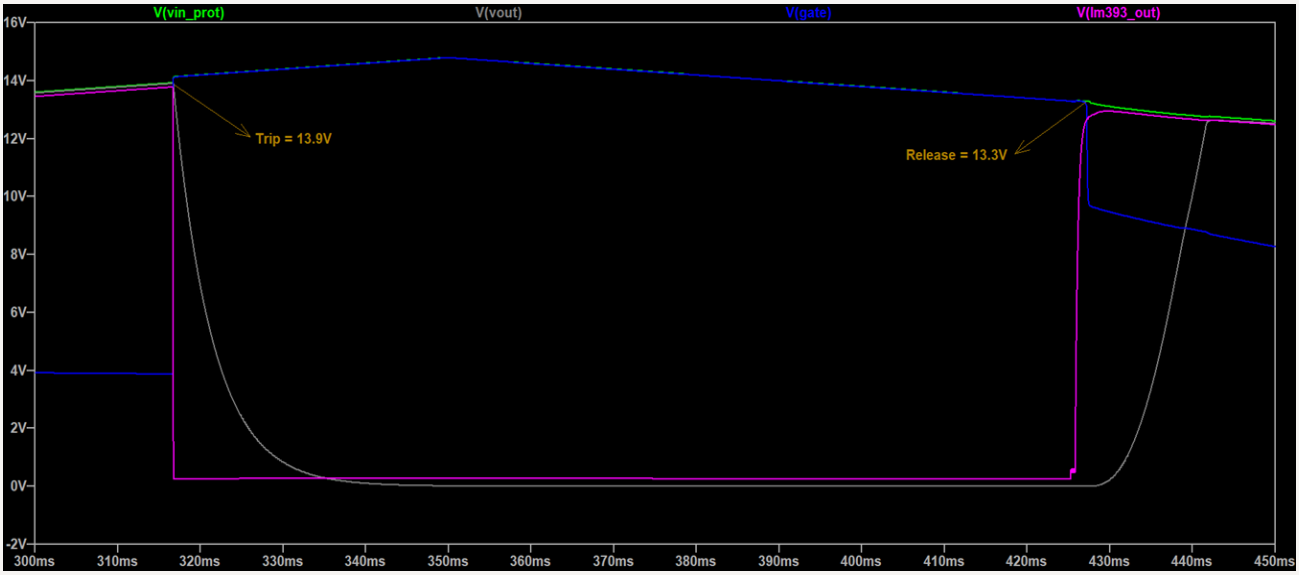

Figure 3: Hysteresis behavior (0.6 V)

The comparator output transitions within **~1.6 µs** after the threshold is crossed. The MOSFET is turned OFF rapidly via the **Q1** (PNP) path, while the output voltage decays gradually based on the connected load and output capacitance.

13.4 Load Testing

The circuit was validated under multiple load conditions to ensure stability:

1. **10 Ω Load:** Current ≈ 1.3–1.4 A. Stable operation with minimal voltage drop.
2. **2 Ω Load:** Current ≈ 6–7 A. Stable switching behavior with increased thermal stress on **D1**.
3. **1 Ω Load:** Current ≈ 12–13 A (transient). Observed significant power spikes in **M1**, though remaining within the Safe Operating Area (SOA) for short durations.

13.5 Power Dissipation

Power dissipation was analyzed to ensure component reliability during both normal operation and fault conditions.

Transient events:

- **MOSFET peak power:** Evaluated at the moment of over-voltage cutoff across varying loads:

    - **10 Ω Load (~1.3 A):** ≈ 150 W
    - **2 Ω Load (~6–7 A):** ≈ 160–170 W
    - **1 Ω Load (~12–13 A):** ≈ 190 W
- **Schottky Diode:** Experiences significant peak power under low-resistance loads before cutoff.
- **Safety:** These are microsecond-scale pulses that fall safely within the device Safe Operating Area (SOA).

Steady-state losses:

- **MOSFET:** Extremely low due to low $R_{DS\ (on)}$.
- **Diode:** Acts as the dominant loss element $(P = V_f \times I)$ and the primary thermal bottleneck.

13.6 Response Time

Summary:

- **Comparator switching:** ~1.34 µs.
- **Gate transition:** ~0.28 µs.
- **Total protection response:** ~1.63 µs.

Timing Breakdown:

To better understand the system response, the total delay can be divided into three stages:

1. **Detection latency (T_{detect}):** 1.344 µs
   Time from threshold crossing to comparator output transition; consistent with device propagation delay.
2. **Execution latency (T_{exec}):** 0.284 µs
   Time required for the driver stage to discharge the MOSFET gate and initiate turn-off.
3. **Total reaction time:** 1.628 µs
   Overall delay from over-voltage detection to the start of load disconnection.

Note: While MOSFET turn-off occurs within ~2 µs, the decay of V_{OUT} depends on load resistance and output capacitance.

13.7 Protection Validation

Reverse polarity test:

- **VIN_PROT:** ≈ 0 V.
- **VOUT:** ≈ 0 V.
- **Result:** No conduction occurs; the circuit and load are fully protected.

Over-voltage spike test:

- **Detection:** System correctly identifies the fault.
- **Action: M1** turns OFF immediately.
- **Recovery:** Output recovers cleanly and performs a soft-start once the fault is removed.

The circuit demonstrates reliable, repeatable protection under all simulated fault conditions.

14. Real-World Consideration

While the circuit has been validated through simulation, several real-world factors can influence its performance. These variables should be considered for physical PCB implementation and environmental testing.

1. PCB Trace Resistance

In a physical implementation, copper traces introduce parasitic resistance, especially in high-current paths. This can lead to:

- **Voltage Drop:** Additional millivolts lost across the board.
- **Power Dissipation:** I^2R losses within the traces themselves.
- **Localized Heating:** Increased thermal stress on the PCB substrate near the diode and MOSFET.

---

2. Connector and Contact Resistance

Screw terminals and connectors introduce small resistances (typically 10–50 mΩ) that become significant at higher currents. These contacts can act as heat sources if not properly rated for the 10+ A transients discussed in the load testing section.

---

3. Temperature Effects

Component behavior varies with ambient temperature and self-heating:

- **MOSFET $R_{DS\ (on)}$:** Increases significantly with temperature, potentially doubling at high junction temperatures.
- **Diode Forward Voltage:** Decreases as temperature rises, which can slightly shift efficiency.
- **Zener Voltage:** Drifts with temperature changes (positive or negative depending on the Zener voltage).
- **Comparator Offset:** Input offset voltage varies, which may slightly shift the trip threshold.

---

4. Zener Tolerance and Operating Region

The reference Zener (**D3**) operates in the "knee region" (~1–2 mA) rather than its rated test current (≈49 mA). This results in:

- **Lower Effective Voltage:** Observed ~4.8–4.9 V instead of the nominal 5.1 V.
- **Increased Variation:** The reference is more sensitive to input voltage fluctuations in this region.

---

5. Tolerance Stack-Up

The actual trip voltage in a production run will vary due to the combined tolerances of:

- **Resistors:** Typically ±1% or ±5%.
- **Zener Diodes:** Nominal vs. actual breakdown.
- **Comparator Offset:** Internal manufacturer variations.

These factors together define the "design margin" required to ensure the circuit triggers reliably within a safe window.

---

6. MOSFET Gate Behavior

Real-world MOSFET switching is more complex than simple RC timing due to:

- **Gate Charge (Q_g):** Total energy required to flip the switch.
- **Miller Capacitance (C_{rss}):** Influences the "plateau" in the gate voltage waveform.
- **Nonlinear Capacitances:** C_{gs} and C_{ds} vary with applied voltage, affecting soft-start and switching dynamics.

---

7. Supply Noise and Transients

Practical environments (especially automotive or industrial) include switching noise and load-induced transients. The inclusion of **C1** (decoupling capacitor) is critical for filtering high-frequency noise and preventing "chatter" or false tripping of the comparator.

Conclusion: The simulated behavior represents an idealized scenario. A robust implementation requires accounting for these physical variations to ensure long-term reliability.

15. Limitations

Despite its functionality, the circuit has several inherent limitations that should be noted for specific applications:

1. No Over-Current Protection (OCP)

The circuit does not actively sense or limit the output current. In a fault condition, such as a short circuit, the current is limited only by the source impedance and the saturation characteristics of the MOSFET.

---

2. No Under-Voltage Lockout (UVLO)

The current design focus is strictly on over-voltage and reverse polarity. It does not disconnect the load during under-voltage conditions, which could be a concern for battery-sensitive applications.

---

3. Current Capability Limited by Diode (D1)

While the MOSFET is rated for high currents, the **D1** Schottky diode effectively limits the continuous current to approximately **3 A** without an external heatsink due to thermal dissipation.

---

4. Voltage Drop

The inclusion of the series protection diode introduces a forward voltage drop (typically **0.3–0.4 V**). This reduces the overall system efficiency and the available voltage delivered to the load.

---

5. Limited Threshold Accuracy

The use of a simple Zener diode as a voltage reference introduces minor inaccuracies due to:

- **Voltage Variation:** Dependency on the bias current through **R4**.
- **Temperature Dependence:** Thermal drift affecting the Zener breakdown voltage.

---

6. Not Suitable for Automotive Systems

The current OVP threshold (**~13.9 V**) is lower than standard automotive charging voltages, which typically range from **13.5 V to 14.7 V**. Using this circuit in a modern vehicle would result in frequent unintended cutoffs.

---

7. No Short-Circuit Protection

The circuit lacks a fast-acting current shut-off mechanism. High current spikes can occur under short-circuit conditions, potentially stressing the components before external fuses or source limits engage.

Conclusion: These limitations highlight clear areas for refinement in future iterations of the design.

16. Future Improvements

To evolve the design from a discrete prototype to a robust, professional-grade protection module, the following enhancements are proposed:

1. Over-Current Protection (OCP)

- **Sense Resistor:** Integrate a low-side or high-side shunt resistor to monitor current flow.
- **Amplification:** Utilize a dedicated current-sense amplifier (e.g., **INA180**) for precision.
- **Logic:** Implement a latching cutoff or active current limiting to protect the MOSFET and load during short circuits.

---

2. Crowbar Protection

- **Mechanism:** Add an SCR-based crowbar circuit at the output.
- **Function:** Provides a "hard" shutdown by blowing an input fuse during severe over-voltage events, serving as a redundant safety layer if the MOSFET fails to open.

---

3. Under-Voltage Lockout (UVLO)

- **Logic:** Add a second comparator stage to monitor the lower voltage bound.
- **Benefit:** Prevents operation under unsafe low-voltage conditions, which is critical for protecting lead-acid or lithium batteries from deep discharge.

---

4. Precision Voltage Reference

- **Upgrade:** Replace the Zener diode (**D3**) with a precision shunt regulator like the **TL431**.
- **Benefit:** Significantly improves threshold accuracy, reduces temperature drift, and eliminates the "knee region" inconsistencies observed in the current design.

---

5. "Ideal Diode" Reverse Protection

- **Upgrade:** Replace the Schottky diode (**D1**) with an N-channel or P-channel MOSFET-based "ideal diode" controller.
- **Benefit:** Reduces the forward voltage drop from ~400 mV to negligible levels $(I \times R_{DS\,(on)})$, drastically increasing efficiency and reducing heat.

---

6. Thermal Management

- **Physical:** Add dedicated heatsinking to the TO-220 packages.
- **PCB Design:** Optimize copper pour areas to act as "thermal vias" and heat spreaders for surface-mount components.

---

7. PCB Layout Optimization

- **Trace Width:** Utilize heavy copper (~2.8 mils) and wide traces for high-current paths.
- **Kelvin Sensing:** Implement Kelvin connections for the voltage divider to ensure the comparator senses the true input voltage, independent of high-current trace drops.
- **Grounding:** Separate power ground from signal ground (Star Grounding) to prevent switching noise from affecting the comparator's reference.

---

8. Transient Protection

- **Component:** Add a Transient Voltage Suppressor (**TVS**) diode at the input.
- **Benefit:** Protects the internal circuitry against high-voltage surges and "load dump" transients common in automotive and industrial environments.

Conclusion: These improvements can significantly enhance robustness and performance.

17. Design Evolution

This project underwent multiple iterations and refinements during development. The transition from a theoretical concept to a validated simulation required addressing several non-ideal behaviors inherent in analog components.

1. Hysteresis Implementation

Challenge: Initial design attempts placed the feedback network on the inverting input, which led to significant instability and high-frequency oscillation near the trip threshold.

Learning Point: Transitioning to a positive feedback topology on the non-inverting input (via **R5**) successfully implemented hysteresis. This resulted in the stable, clean switching behavior required for a protection circuit.

---

2. Zener Behavior Realization

Challenge: The reference Zener (**D3**) was initially assumed to maintain a fixed 5.1 V across all operating conditions.

Learning Point: Simulation revealed that at the low bias currents used (~1–2 mA), the diode operates in the "knee region," yielding a lower voltage of **~4.8–4.9 V**. This discovery necessitated a recalculation of the voltage divider (**R1, R2**) to maintain the desired 13.9 V trip point.

---

3. Ideal vs. Real MOSFET Model

Challenge: Initial simulations using idealized MOSFET models failed to capture the nuances of the turn-on and turn-off phases.

Learning Point: Replacing the ideal component with a high-fidelity **IRF4905** model revealed the significant influence of gate charge (Q_g) and Miller capacitance (C_{rss}). This change provided a much more accurate representation of the soft-start ramp and switching energy.

---

4. Soft-Start Design Refinement

Challenge: Reaching a consistent ~10 ms startup time was difficult because the MOSFET threshold voltage ($V_{gs(th)}$) varies between units and models.

Learning Point: The RC network (**R9, C3**) required iterative tuning. By understanding that the MOSFET begins conducting well before the capacitor is fully charged, the values were optimized to provide a smooth, repeatable power-up sequence.

---

5. Simulation Convergence Issues

Challenge: The complex interaction between the high-gain comparator, the positive feedback loop, and the heavy switching of the P-MOSFET occasionally caused the simulation engine to stall or produce convergence errors.

Learning Point: This required fine-tuning simulation parameters and circuit topology (such as adding the **C2** compensation capacitor) to ensure the software could accurately model the rapid transitions without mathematical instability.

---

6. Reverse Polarity Protection Integration

Challenge: Adding **D1** (Schottky diode) provided essential protection but introduced a series voltage drop that affected efficiency.

Learning Point: This highlighted the fundamental trade-off in analog design: adding protection features often comes at the cost of slight power loss and increased thermal management requirements.

Conclusion: These iterations emphasize that successful analog design depends on moving beyond "ideal" calculations and accounting for the non-linear, non-ideal behaviors of real-world silicon.

18. Conclusion

This project demonstrates the design and validation of a discrete 12 V power protection circuit incorporating multiple protective features within a simple architecture. By utilizing standard analog components, the system provides a robust solution for safeguarding sensitive electronics from common power-line faults.

The circuit successfully achieves:

- **Reverse polarity protection** via a high-current Schottky diode.
- **Over-voltage cutoff** at ≈13.9 V with a stable 0.6 V hysteresis band.
- **Controlled soft-start** with a 10–13 ms ramp to mitigate inrush current.
- **Fast protection response** of ≈1.6 µs to ensure rapid disconnection during spikes.

The design highlights key analog engineering concepts, including feedback behavior, device non-idealities, transient response, and trade-offs in component selection. Through iterative refinement and simulation-based validation, the project evolved from a theoretical concept into a well-characterized and functional protection system.

While the current implementation has inherent limitations—specifically regarding thermal bottlenecks and precision—it provides a strong foundation for future enhancements. This project serves as a practical demonstration of power electronics design principles and the importance of bridging the gap between ideal models and real-world component behavior.

19. References

GitHub: https://github.com/DannyJusvin/Front-End-Power-Protection

Simulation Waveform: Simulation Waveform.pdf

Circuit Schematic: Protection System Schematics.pdf

Project Logs: Project Logs.pdf