Generalized Lyapunov Functions for Discrete-Time Lurie Systems With Slope-Restricted Nonlinearities

Ross Drummond and Giorgio Valmorbida

***Abstract*—A class of Lyapunov functions for discrete-time Lurie systems with monotonic nonlinearities is proposed. The Lyapunov functions are composed of quadratic terms on the states and of the system's nonlinearities as well as Lurie–Postnikov-type integral terms. Crucially, positive definiteness of the matrix in the generalized quadratic form and positivity of the scaling terms of the Lurie–Postnikov integrals are relaxed in the stability conditions. Furthermore, they are used for regional stability analysis and performance assessment. Numerical examples show that the proposed Lyapunov function structure matches or outperforms existing ones for these systems.**

***Index Terms*—Discrete-time absolute stability, Lurie systems, Lyapunov functions.**

I. Introduction

SEVERAL recent applications, including the stability analysis of neural network-based control policies [5], [17], [24] and the convergence analysis of first-order optimization algorithms [8], [12], can be understood within the context of discrete-time Lurie systems. The impact these applications have found has motivated a revisit of the absolute stability problem in discrete time to further develop methods for the stability analysis of Lurie systems with slope-restricted nonlinearities. However, the stability analysis of discrete-time Lurie systems remains underdeveloped compared to those for continuous-time systems; for example, the widely adopted formulation of the Popov criterion in discrete-time requires additional conditions on the nonlinearity, including monotonicity [21]. Back in 1963 [19, Discussion], Szegö identified the disconnect between the continuous and discrete absolute stability problems:

Manuscript received 23 September 2021; revised 28 September 2021 and 12 June 2022; accepted 14 December 2022. Date of publication 2 January 2023; date of current version 27 September 2023. This work was supported in part by the Royal Academy of Engineering through a U.K. Intelligence Community fellowship and in part by the EPSRC Project EP/P005411/1 and the ANR via Grant HANDY, ANR-18-CE40-0010. Recommended by Associate Editor V. Andrieu.

Ross Drummond is with the Department of Automatic Control and Systems Engineering, University of Sheffield, Sheffield S10 2TN, U.K. (e-mail: ross.drummond@sheffield.ac.uk).

Giorgio Valmorbida is with the L2S, Centrale Supélec, CNRS, Université Paris-Saclay, 91190 Gif-sur-Yvette, France (e-mail: giorgio.valmorbida@centralesupelec.fr).

Color versions of one or more figures in this article are available at https://doi.org/10.1109/TAC.2022.3233540.

Digital Object Identifier 10.1109/TAC.2022.3233540

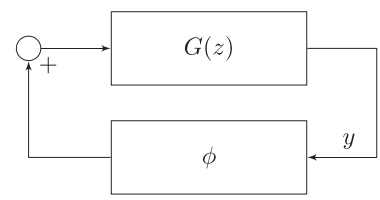

Fig. 1. Feedback representation of a Lurie system.

"*Even if we have now some fairly good results on this problem, the status of stability theory for sampled-data systems has still not reached a satisfactory stage as in the continuous case. Further work is needed and improvements can be achieved by using the new method of Popov and very likely by using some more sophisticated Lyapunov functions.*"

Adopting more sophisticated Lyapunov functions should allow more complex applications modeled as discrete-time systems to be analyzed while generating less conservative performance certificates. As a step in this direction, this article explores the stability analysis of discrete-time Lurie systems with slope-restricted nonlinearities. A new class of Lyapunov functions is proposed with a simplified structure than the current state-of-the-art [3], [15] and conditions are developed for the regional stability analysis and bounding input–output gains of these systems.

Problem Setup

Consider a single-input single-output (SISO) discrete-time Lurie system described by the feedback interconnection of a strictly proper, linear system, with transfer function $G(z)$, and a function $\phi : \mathbb{R} \to \mathbb{R}$, as illustrated in Fig. 1.

Here, $G(z)$ is assumed to admit a minimal state-space realization

$$x[k+1] = Ax[k] + B\phi(y[k]) \tag{1a}$$

$$y[k] = Cx[k] \tag{1b}$$

with $A \in \mathbb{R}^{n\times n}$, $B \in \mathbb{R}^{n\times 1}$, and $C \in \mathbb{R}^{1\times n}$.

The nonlinearity ϕ is assumed to be *static*, $\phi(0) = 0$, and *sector bounded* with sector $[\underline{\delta}, \overline{\delta}]$

$$(\overline{\delta}\sigma - \phi(\sigma))(\phi(\sigma) - \underline{\delta}\sigma) \geq 0 \quad \forall \sigma \in \mathbb{R} \tag{2a}$$

as in $\phi(\sigma)/\sigma \in [\underline{\delta}, \overline{\delta}]$ for some $\underline{\delta} \in \mathbb{R}$, $\overline{\delta} \in \mathbb{R}$ satisfying $\underline{\delta} < \overline{\delta}$. If $\underline{\delta} > 0$ the sector is said to be *strict*.

0018-9286 © 2023 IEEE. Personal use is permitted, but republication/redistribution requires IEEE permission.
See https://www.ieee.org/publications/rights/index.html for more information.

Authorized licensed use limited to: UNIVERSITAETSBIBL STUTTGART. Downloaded on September 29,2025 at 08:51:42 UTC from IEEE Xplore. Restrictions apply.

We say the nonlinearity is *slope restricted* if

$$\frac{\phi(\sigma_1)-\phi(\sigma_2)}{\sigma_1-\sigma_2} \in [\underline{\beta}, \overline{\beta}]\, \forall \sigma_1, \sigma_2 \in \mathbb{R} \tag{2b}$$

for some $\underline{\beta}, \overline{\beta} \in \mathbb{R}$ and *monotonic* if $\underline{\beta} \geq 0$. Note that monotonicity can always be obtained by loop transformations whenever the nonlinearity is slope-bounded.

The following analysis is restricted to SISO Lurie systems, where $\phi : \mathbb{R} \to \mathbb{R}$ instead of multiple-input multiplier-output (MIMO) ones, where $\phi : \mathbb{R}^m \to \mathbb{R}^m$. The two main reasons for considering this simpler problem setup here are: 1) it simplifies the connections to the multiplier methods, which are typically posed for SISO Lurie systems, e.g., in [22], and 2) it reduces the notational burden. However, it is stressed that, with some minor modifications, the presented results can be readily generalized to MIMO Lurie systems, similarly to the presentation of [15].

Article structure: The article is structured as follows. Section II introduces the proposed class of Lyapunov function. Section III presents the main results of the article: Section III-A exploits the proposed Lyapunov function to formulate global stability conditions, Section III-B presents local sector and slope inequalities and formulates regional stability conditions, finally, Section III-C extends the analysis to an input/output setting. Section IV presents several numerical examples to support the theory.

Notation: We use square bracket to denote the value of a discrete-time signal y at instant k, e.g., $y[k]$. The forward difference Δ acting on a function $V : \mathbb{R}^n \to \mathbb{R}_{\geq 0}$ along the solution of a discrete-time system $x[k+1] = f(x)$ is defined as $\Delta V[k] := V(x[k+1]) - V(x[k])$. The set of nonnegative real numbers is denoted $\mathbb{R}_{\geq 0}$. The basis vector $\mathbf{e}_j^N \in \mathbb{R}^N$ is composed of zeros everywhere except a 1 at element j. Symmetric matrices of dimension n are $\mathbb{S}^n$ and symmetric positive definite matrices of dimension n are $\mathbb{S}^n_{\succ 0}$. The set of upper-triangular matrices with nonnegative entries is $\mathbb{U}^N_{\geq 0}$. For a matrix $A \in \mathbb{R}^{n\times n}$, we denote $He(A) = A^\top + A$. The block-diagonal matrix composed of blocks $A \in \mathbb{R}^{n\times n}$ and $B \in \mathbb{R}^{m\times m}$ is denoted $\mathrm{diag}(A, B)$. The notation $\mathcal{E}(V, \rho)$ is used to define the level-sets of a function V, as in the set $\mathcal{E}(V, \rho) = \{x : V(x) = \rho\}$.

II. Generalized Quadratic and Integral Lyapunov Functions

A new class of Lyapunov functions for discrete-time Lurie systems is proposed. We use the proposed function in Theorem 1, the main result of the article, to study the stability of systems with monotone nonlinearities. Importantly, the parameters of the considered function, namely a matrix in a generalized quadratic form and the scaling terms in integrals, need not be positive definite.

A. Proposed Lyapunov Function

Given a function $\phi : \mathbb{R} \to \mathbb{R}$, define the vector function $\nu : \mathbb{R}^n \to \mathbb{R}^{N+1}$, $\chi \mapsto \nu(\chi)$, with ν_j denoting the jth element of ν as

$$\nu_j(\chi) = \begin{cases} C\chi, & j = 0 \\ CA^j\chi + \sum_{i=1}^{j} CA^{j-i}B\phi(\nu_{i-1}), & 1 \leq j \leq N. \end{cases} \tag{3}$$

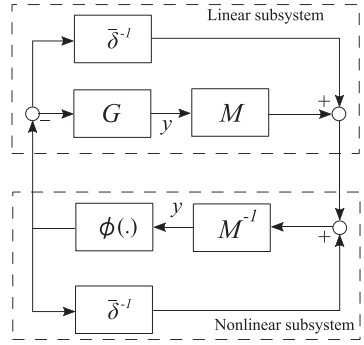

Fig. 2. Stability of the Lurie system can be shown via passivity of the above feedback system, where G is the linear system, M is the multiplier, and $\phi(.)$ is the nonlinearity.

From the above definition, we have that $\nu_j(\chi)$ is the jth-step propagation of y in (1) from $x[0] = \chi$. Let us also introduce the vector function $\xi_N : \mathbb{R}^n \to \mathbb{R}^{n+N+1}$

$$\xi_N(\chi) = \Big[\chi^\top, \quad \phi(\nu_0(\chi)), \quad \ldots, \quad \phi(\nu_N(\chi))\Big]^\top. \tag{4}$$

For a fixed $N \in \mathbb{N} \cup \{0\}$, we can thus define the function $V : \mathbb{R}^n \to \mathbb{R}$, $x \mapsto V(x)$

$$V(x) = \overbrace{\xi_N(x)^\top P \xi_N(x)}^{V_0(x)} + \sum_{j=0}^{N} \lambda_j \int_0^{\nu_j(x)} \phi(s)\, ds \tag{5}$$

with $\lambda \in \mathbb{R}^{N+1}$, and $P \in \mathbb{S}^{n+N+1}$. In the rest of the article, we may omit the dependence on x of ξ_N and ν_j to simplify the notation and may also avoid denoting explicitly the dependence of $V(x)$ on N.

The above function is composed of a *generalized quadratic* term $V_0(x)$ and the *integral* terms. It will be used as a Lyapunov candidate function to show stability of (1). Namely, we will formulate inequalities imposing conditions on its parameters P and λ for the stability of the origin of (1).

B. Discussion on the Proposed Function

We now discuss the structure of the above function and its connection to the Popov-type stability criteria for both continuous- and discrete-time Lurie systems.

First, it is noted how the function generalizes the *Tsypkin Lyapunov function* for discrete-time systems

$$V_{\text{Tsyp}}(x) = x^\top P_0 x + \eta \int_0^{Cx} \phi(\sigma)\, d\sigma \tag{6}$$

which is obtained after setting $N = 0$ in (5). The above V_{Tsyp} first appeared in [18] with $P_0 \in \mathbb{S}^n$ and parameter $\eta \in \mathbb{R}$ (not sign-defined).

1) Continuous-Time Systems: It can also be observed that (6) also appears from the derivation of Popov-type stability criteria of continuous-time Lurie systems using passivity. Roughly speaking, this stability criterion considers the loop-transformed Lurie system of Fig. 2. It follows from passivity (under some additional assumptions, see [11, Ch. 6] for details) that the stability of this system can be inferred as long as both the upper linear subsystem and the lower nonlinear subsystem can

Authorized licensed use limited to: UNIVERSITAETSBIBL STUTTGART. Downloaded on September 29,2025 at 08:51:42 UTC from IEEE Xplore. Restrictions apply.

be shown to be passive. Since the upper subsystem is linear, it admits a quadratic storage function, but the passivity of the nonlinear subsystem requires exploiting the sector bounds.

Indeed, with the *Popov* multiplier $M(s) = (1 + \eta s)$ in the linear branch, passivity for the nonlinear branch can be shown provided there exists a storage function $S : \mathbb{R} \to \mathbb{R}$ satisfying

$$\frac{dS(t)}{dt} \leq \phi(y(t)) \left(y(t) + \eta \frac{dy(t)}{dt} \right).$$

Since the nonlinearity ϕ lies within the sector $[0, \bar{\delta}]$, we have $\phi(y)y \geq 0$. To verify the above inequality, it thus suffices to obtain a function $S : \mathbb{R} \to \mathbb{R}$ satisfying

$$\frac{dS(y(t))}{dt} = \eta \phi(y(t)) \frac{dy(t)}{dt}$$

or, in its integral form,

$$\begin{aligned} S(y(T)) - S(y(0)) &= \eta \int_0^T \phi(y(t)) \frac{dy(t)}{dt}\, dt \\ &= \eta \int_{y(0)}^{y(T)} \phi(\sigma)\, d\sigma \\ &= \eta \int_0^{y(T)} \phi(\sigma)\, d\sigma - \eta \int_0^{y(0)} \phi(\sigma)\, d\sigma. \end{aligned} \tag{7}$$

Thus, by identifying terms in the above equation, we can use the function $S(y) = \eta \int_0^y \phi(\sigma)\, d\sigma$ as a *storage function* for the nonlinear branch of the loop-transformed system, and, since $y = Cx$, S can be expressed as the mapping $x \mapsto S(Cx)$. The sum of a quadratic function as the storage function certifying the passivity of the linear subsystem and the integral term as the storage function for the nonlinear subsystem gives V_{Tysp} as a candidate Lyapunov function for the continuous-time Lurie system.

2) Discrete-Time Systems: The following introduces a similar passivity-based analysis on the use of the function but for discrete-time Lurie systems. For these systems, with an equivalent feedback structure to Fig. 2, it is usual to substitute the continuous-time multiplier $(1 + \eta s)$ by a discrete-time *Popov* multiplier $M(z) = (1 + \eta(1 - z^{-1}))$ [10], [16]. By replacing the structure of this multiplier by $M(z) = 1 + \eta \sum_{i=0}^{N} c_i z^i$ for some real coefficients c_i, the passivity of the nonlinear subsystem can be shown if we can find a function $S : \mathbb{R} \to \mathbb{R}$ satisfying

$$S(y[k]) - S(y[k-1]) = \eta \left(\sum_{i=0}^{N} c_i y[k+i] \right) \phi(y[k])$$

or, in its summation form

$$\begin{aligned} S(y[K]) - S(y[0]) &= \eta \sum_{k=1}^{K} \left(\sum_{i=0}^{N} c_i y[k+i] \right) \phi(y_k) \\ &= -\eta \sum_{k=K+1}^{\infty} \left(\sum_{i=0}^{N} c_i y[k+i] \right) \phi(y_k) \\ &\quad + \eta \sum_{k=0+1}^{\infty} \left(\sum_{i=0}^{N} c_i y[k+i] \right) \phi(y_k). \end{aligned}$$

By identifying terms, the infinite sum $S(y[\ell]) = -\eta \sum_{k=\ell+1}^{\infty} \left(\sum_{i=0}^{N} c_i y[k+i] \right) \phi(y_{k+1})$ can be identified as a storage function. However, note that the above contrasts with (7) since to compute the values of S for a given time instant, that is $S(y[\ell])$, the signal y from the solution of the system must be known. For the continuous-time case, the integral in (7) allows for the dependence on time of the output signal y to be dropped.

It follows that adding a quadratic storage function $S_{\text{lin}}(x) = x^\top P_0 x$, $P_0 \in \mathbb{S}^n_{\succ 0}$ for the linear subsystem to the above expression (below we also replace y in the above sum by ν since we have $\nu_j = y[j]$ from (3)], the corresponding Lyapunov function structure should be

$$V_{\text{Pop}}(x) := x^T P_0 x - \eta \sum_{k=1}^{\infty} \left(\sum_{i=0}^{N} c_i \nu_{k+i}(x) \right) \phi(\nu_k) \tag{8}$$

which contains a sum, not an integral as in (6).

By rearranging terms in the double sum and regrouping the terms ν_{k+i} into a single index $j = k + i$, we obtain scalars $\tilde{c}_j$, such that

$$\sum_{k=1}^{\infty} \left(\sum_{i=0}^{N} c_i \nu_{k+i}(x) \right) \phi(\nu_k) = \sum_{j=1}^{N} \tilde{c}_j \nu_j \phi(\nu_j) + \sum_{j=N+1}^{\infty} \tilde{c}_j \nu_j \phi(\nu_j).$$

The first term above can be written as a quadratic form in $\xi_N(x)$ namely $\sum_{j=1}^{N} \tilde{c}_j \nu_j \phi(\nu_j) = \xi_N(x)^\top P_T \xi_N(x)$, with $P_T \in \mathbb{S}^{n+N+1}$. Hence, adding this first term to the quadratic function $x^\top P_0 x$, we obtain a term as in $V_0(x)$ of (5). We are left with the sum $\sum_{j=N+1}^{\infty} \tilde{c}_j \nu_j \phi(\nu_j)$. In the case this remaining term is bounded, we can then consider the integrals of (5) as approximations of this infinite sum. Thus, (5) gives an approximation of the function in (8).

In the above discussion, the storage function showing the passivity of the nonlinear branch of the continuous-time system was obtained using only the sector information. Unfortunately, when the sums are replaced by the integral terms for the discrete-time problem, it is no longer possible to carry out the stability analysis considering only sector information since the integrals need to be bounded by quadratic terms using slope information as in [10], [16], and [20]. We thus have to assume monotonicity of the nonlinearity hereafter and will use Lemma 1 below to bound integrals.

C. Related Work

Remark 1: We now show that $V(x)$ in (5) includes the recently developed Lyapunov function of [15] as a special case when $N = 1$. To show this, consider the Lyapunov function $\hat{V}(x)$ from [15] which can be expressed as

$$\hat{V}(x) = V_1(x) + V_2(x) + V_3(x) + V_3'(x) \tag{9}$$

with parameters $\bar{P} \in \mathbb{S}^{2n+2}_{\geq 0}$, $\{m_1, m_2, n_1, n_2, n_3, n_4\} \in \mathbb{R}_{\geq 0}$ defining $V_1(x) = \zeta^\top \bar{P} \zeta$ $\zeta = \left[x^\top, \quad x[k+1]^\top, \quad \phi(\nu_0(x)), \phi(\nu_1(x))\right]$, and

$$V_2(x) = 2m_1 \int_{\nu_0(x)}^{\nu_1(x)} \phi(\sigma) - \phi(\nu_0(x)) d\sigma$$

Authorized licensed use limited to: UNIVERSITAETSBIBL STUTTGART. Downloaded on September 29,2025 at 08:51:42 UTC from IEEE Xplore. Restrictions apply.

$$
\begin{aligned}
&+ 2m_2 \int_{\nu_0(x)}^{\nu_1(x)} \overline{\beta}(\sigma - \nu_0(x)) - (\phi(\sigma) - \phi(\nu_0(x))d\sigma \\
&= 2m_1 \Bigg(\int_0^{\nu_1} \phi(\sigma)d\sigma - \int_0^{\nu_0} \phi(\sigma)d\sigma \\
&\quad - \phi(\nu_0)(\nu_1 - \nu_0) \Bigg) \\
&\quad + 2m_2 \Bigg(\frac{\overline{\beta}}{2}(\nu_1^2 - 2\nu_0\nu_1 + \nu_0^2) - \int_0^{\nu_1} \phi(\sigma)d\sigma \\
&\quad + \int_0^{\nu_0} \phi(\sigma)d\sigma + \phi(\nu_0)(\nu_1 - \nu_0) \Bigg) \\
V_3(x) &= 2n_1 \int_0^{\nu_0(x)} \phi(\sigma)d\sigma + 2n_2 \int_0^{\nu_0(x)} \delta\sigma - \phi(\sigma)\, d\sigma, \\
&= 2n_1 \int_0^{\nu_0} \phi(\sigma)d\sigma + 2n_2 \left(\frac{\delta\nu_0(x)^2}{2} - \int_0^{\nu_0} \phi(\sigma)\, d\sigma \right) \\
V_3'(x) &= 2n_3 \int_0^{\nu_1(x)} \phi(\sigma)d\sigma + 2n_4 \int_0^{\nu_1(x)} \delta\sigma - \phi(\sigma)\, d\sigma \\
&= 2n_3 \int_0^{\nu_1} \phi(\sigma)d\sigma + 2n_4 \left(\frac{\delta\nu_1(x)^2}{2} - \int_0^{\nu_1} \phi(\sigma)\, d\sigma \right).
\end{aligned}
$$

Collecting terms in the integrals of V_2, V_3, and V_3' above shows that $\hat{V}$ can be written as (5) with $N = 1$. Indeed, we obtain $\lambda_0 = 2(-m_1 + m_2 + n_1 - n_2)$, $\lambda_1 = 2(m_1 - m_2 + n_3 - n_4)$. Finally, noting that $\zeta = M\xi_2$ with $M = \begin{bmatrix} 0 & 0 & I_n & 0 & 0 \\ 0 & 0 & A & B & 0 \\ 0 & 0 & 0 & 1 & 0 \\ 0 & 0 & 0 & 0 & 1 \end{bmatrix}$, $\nu_0 = [0 \quad 0 \quad C \quad 0 \quad 0]\xi_1$, $\nu_1 = [0 \quad 0 \quad CA \quad CB \quad 0]\xi_1$, and $\phi(\nu_0) = [0 \quad 1 \quad 0]\xi_1$. The matrix P in (5) can be retrieved as a function of coefficients $\bar{P}$, m_1, m_2, n_2, and n_4 by identifying terms in the expression below

$$
\begin{aligned}
\xi_1^\top P \xi_1 &= \xi_1^\top M^\top \bar{P} M \xi_1 - 2m_1\phi(\nu_0)(\nu_1 - \nu_0) \\
&\quad + 2m_2 \left(\frac{\overline{\beta}}{2}(\nu_1^2 - 2\nu_0\nu_1 + \nu_0^2) + \phi(\nu_0)(\nu_1 - \nu_0) \right) \\
&\quad + n_2\delta\nu_0^2 + n_4\delta\nu_1^2.
\end{aligned}
$$

It is further noted that another stability test was stated in [4, Th 5(a), Sec. 7, Ch. VI], which does not require monotonicity of ϕ, instead only that ϕ satisfy a strict sector condition with $\underline{\delta} > 0$. As far as the authors are aware, no equivalent formulation in terms of Lyapunov functions for this result is known.

The recent paper [25] obtained a Lyapunov function by applying the KYP Lemma to FIR Zames-Falb multipliers. Interestingly, the obtained function was also parameterized on an integer related to the order of the multiplier. However, that Lyapunov function is differentiated from the one proposed here by the number of terms used to parametrize it. Indeed, in [25, Appendix], the presented conditions for global stability, for the SISO case, contain a term analogous to V_0 in (5) with a matrix P of dimensions (using the notation in our article) $(N+1)(n+1)$ instead of $n + N + 1$ as in (5). Moreover, by relaxing the positivity conditions of the function of this article, the number of integral terms can be reduced with respect to [25, Appendix] using a similar approach as that applied to [15] above. Finally, it is also noted that the presented results differentiate themselves to [25, Appendix] by treating the regional stability and the induced gain computation, with the numerical examples demonstrating that increasing N for these problems can lead to stronger results.

III. Main Results

Stability conditions using (5) as the candidate Lyapunov function are now stated for the discrete-time Lurie system (1) with a monotonic nonlinearity. We first introduce some quadratic constraints related to the sector-bounded and slope-restricted, monotone, nonlinearities. For a nonlinearity with sector bounds $[\underline{\delta}, \overline{\delta}]$, we define

$$
s_{\text{sec}}(\sigma_i) := \left(\overline{\delta}\sigma_i - \phi(\sigma_i)\right)\left(\phi(\sigma_i) - \underline{\delta}\sigma_i\right) \geq 0 \tag{11}
$$

$\forall \sigma_i \in \mathbb{R}$. The relation below exploits (2b) and monotonicity of ϕ

$$
s_{\text{slo}}(\sigma_i, \sigma_j) := \left(\overline{\beta}(\sigma_i - \sigma_j) - (\phi_i - \phi_j)\right)\left((\phi_i - \phi_j)\right) \geq 0 \tag{12}
$$

$\forall \sigma_i, \sigma_j \in \mathbb{R}$, with $\phi_i = \phi(\sigma_i)$ and $\phi_j = \phi(\sigma_j)$. The above inequality is obtained, from (2b) and monotonicity since we have $\frac{\sigma_i - \sigma_j}{\phi_i - \phi_j} \geq \frac{1}{\overline{\beta}}$, which gives $\frac{(\sigma_i - \sigma_j)(\phi_i - \phi_j)^2}{(\phi_i - \phi_j)} \geq \frac{(\phi_i - \phi_j)^2}{\overline{\beta}}$. The inequalities in the lemma below are obtained using the slope restrictions

Lemma 1 ([*14*, *Lemma 1*]): If ϕ is slope restricted (2b) with $\underline{\beta} \geq 0$ then $\forall \sigma_i, \sigma_j \in \mathbb{R}$

$$
L(\sigma_j, \sigma_i) \leq \int_{\sigma_j}^{\sigma_i} \phi(\sigma)d\sigma \leq U(\sigma_j, \sigma_i) \tag{13}
$$

where

$$
\begin{aligned}
L(\sigma_j, \sigma_i) &= \phi(\sigma_j)(\sigma_i - \sigma_j) + \frac{1}{2\overline{\beta}}\left(\phi(\sigma_i) - \phi(\sigma_j)\right)^2 \\
U(\sigma_j, \sigma_i) &= \phi(\sigma_i)(\sigma_i - \sigma_j) - \frac{1}{2\overline{\beta}}\left(\phi(\sigma_i) - \phi(\sigma_j)\right)^2.
\end{aligned}
$$

The bounds (13) give the inequality below

$$
\begin{aligned}
\lambda^p L\left(\sigma_j, \sigma_i\right) - \lambda^n U\left(\sigma_j, \sigma_i\right) &\leq \left(\lambda^p - \lambda^n\right) \int_{\sigma_j}^{\sigma_i} \phi(s)\, ds \\
&\leq \lambda^p U\left(\sigma_j, \sigma_i\right) - \lambda^n L\left(\sigma_j, \sigma_i\right)
\end{aligned} \tag{15}
$$

that will be used to upper and lower bound the integral terms in the Lyapunov inequalities.

A. Global Stability Analysis

With the inequalities (11), (12), and (15) in hand, global stability conditions with the Lyapunov function $V(x)$ can be formulated.

Theorem 1: Consider the Lurie system of (1) with the nonlinearity ϕ both sector bounded (2a) and slope restricted (2b) with $\underline{\beta} \geq 0$. If there exist $P \in \mathbb{S}^{n+N+1}$, $\{\lambda^p, \lambda^n\} \in \mathbb{R}_{\geq 0}^{N+1}$,

Authorized licensed use limited to: UNIVERSITAETSBIBL STUTTGART. Downloaded on September 29,2025 at 08:51:42 UTC from IEEE Xplore. Restrictions apply.

$\{\tau^{\text{sec}}, \psi^{\text{sec}}, \theta^{\text{sec}}\} \in \mathbb{R}^{N+1}_{\geq 0}$, $\{\tau^{\text{slo}}, \psi^{\text{slo}}, \theta^{\text{slo}}\} \in \mathbb{U}^{N+1}_{\geq 0}$, $\epsilon_2 \geq \epsilon_1 > 0$, and $\epsilon_3 > 0$ such that, $\forall x \in \mathbb{R}^n \setminus \{0\}$

$$\epsilon_1 \|x\|^2 \leq \underline{V}(x) \tag{16a}$$

$$\overline{V}(x) \leq \epsilon_2 \|x\|^2 \tag{16b}$$

$$\overline{\Delta V}(x) \leq -\epsilon_3 \|x\|^2 \tag{16c}$$

with

$$\underline{V}(x) = V_0(\xi_N) + \sum_{j=0}^{N} \lambda_j^p L(0, \nu_j) - \lambda_j^n U(0, \nu_j) - \sum_{j=0}^{N} \tau_j^{\text{sec}} s_{\text{sec}}(\nu_j) - \sum_{j=0}^{N-1} \sum_{g=j+1}^{N} \tau_{j,g}^{\text{slo}} s_{\text{slo}}(\nu_j, \nu_g) \tag{17a}$$

$$\overline{V}(x) = V_0(\xi_N) + \sum_{j=0}^{N} \lambda_j^p U(0, \nu_j) - \lambda_j^n L(0, \nu_j) + \sum_{j=0}^{N} \psi_j^{\text{sec}} s_{\text{sec}}(\nu_j) + \sum_{j=0}^{N-1} \sum_{g=j+1}^{N} \psi_{j,g}^{\text{slo}} s_{\text{slo}}(\nu_j, \nu_g) \tag{17b}$$

$$\overline{\Delta V}(x) = \Delta V_0(\xi_N) + \sum_{j=0}^{N} \lambda_j^p U(\nu_j, \nu_{j+1}) - \lambda_j^n L(\nu_j, \nu_{j+1}) + \sum_{j=0}^{N+1} \theta_j^{\text{sec}} s_{\text{sec}}(\nu_j) + \sum_{j=0}^{N} \sum_{g=j+1}^{N+1} \theta_{j,g}^{\text{slo}} s_{\text{slo}}(\nu_j, \nu_g) \tag{17c}$$

then (1) is globally exponentially stable and $x[k] \in \mathcal{E}(V, V(x[0]))$ with V as in (5) with $\lambda = \lambda^p - \lambda^n$.

Proof: From the quadratic bounds (11), (12) and the lower bound to the integral term in (15), it follows that $\underline{V}(x) \leq V(x)\, \forall x$, with V defined by $\lambda = \lambda^p - \lambda^n$ in (5). Thus, (16a) implies $\epsilon_1 \|x\| \leq V(x)$. Similarly, we show that $\overline{V}(x)$ is an upper bound to $V(x)$ thus (16b) implies $V(x) \leq \epsilon_2 \|x\|$, hence

$$\epsilon_1 \|x\|^2 \leq V(x) \leq \epsilon_2 \|x\|^2. \tag{18a}$$

We have

$$\Delta V(x[k]) = V_0(\xi_N(x[k+1])) - V_0(\xi_N(x[k])) + \sum_{i=0}^{N} \lambda_i \int_{\nu_i}^{\nu_{i+1}} \phi(s) ds.$$

Using the inequalities (11), (12) and both bounds to the integral terms in (15), we conclude that $\Delta V(x) \leq \overline{\Delta V}(x)$, hence the satisfaction of $\overline{\Delta V}(x) < -\epsilon_2 \|x\|^2$ implies

$$\Delta V(x) < -\epsilon_2 \|x\|^2. \tag{18b}$$

To conclude, if the conditions of the theorem are satisfied, we use (18) to obtain $\|x[k]\|^2 \leq \frac{\epsilon_2}{\epsilon_1}(1 - \frac{\epsilon_3}{\epsilon_2})^k \|x[0]\|^2$. ■

Remark 2: Since the inequalities that need to be checked in Theorem 1 are quadratic expressions, they can be cast as linear matrix inequalities (LMIs). Specifically, the terms of (17a), (17b) can be cast as quadratic forms on the vector ξ_N, and (17c) is a quadratic form on the vector ξ_{N+1}. These LMIs are detailed in (33) in the Appendix and they are solved to obtain the numerical results reported in Section IV.

Remark 3: A key feature of Theorem 1 is related to the set of parameters defining V in (5). Note that the positivity of the elements of λ in V are relaxed in Theorem 1 since $\lambda = \lambda^p - \lambda^n$ with λ^p and λ^n being nonnegative vectors. The sign definiteness of the matrix P in (5) is also relaxed in Theorem 1 by exploiting the sector and slope conditions. These relaxations parallel the results by the authors for continuous-time Lurie systems [23] and those with rational vector fields [6], where the positivity of the LF parameters have also been relaxed.

B. Regional Stability Analysis

In many cases, a regional stability analysis is often desired since global stability may not be achieved for nonlinear systems. This is the case when the domain of the nonlinearity is not $\mathbb{R}$ (e.g., with $\phi(\sigma) = \ln(1+\sigma)$) or when the region of attraction of the origin is some set $\mathcal{R}_0 \subset \mathbb{R}^n$ with $0 \in \mathcal{R}_0$. The previous section demonstrated how the function (5) could be used for a global stability analysis of a Lurie system, corresponding to a region of attraction of the origin given by $\mathbb{R}^n$.

This section follows a similar approach to [23], where the regional stability for continuous-time systems was studied, and provides conditions to obtain estimates of the region of attraction of the origin using (5). Such estimates will be invariant sets given by level sets of the Lyapunov function. We guarantee the inclusion of these level sets within a subset of the state space, where (local) sector and slopes bounds for the nonlinearities hold. We characterize these sets by considering scalars $\underline{y} \leq 0$, $\overline{y} \geq 0$ that define

$$\mathcal{X}_0 = \{x \in \mathbb{R}^n : (\overline{y} - \nu_0(x))(\nu_0(x) - \underline{y}) \geq 0\}$$

that is, $\forall x \in \mathcal{X}_0, \nu_0(x) \in [\underline{y}, \overline{y}]$. The values $\underline{y}, \overline{y}$ give the interval of the domain of the nonlinearity ϕ in (1), where sector and slope bounds will be assumed to hold.

We thus assume that $\forall \sigma_i \in [\underline{y}, \overline{y}]$, we have

$$s_{\text{sec,loc}}(\sigma_i) := \left(\overline{\delta}_{\text{loc}}(\underline{y}, \overline{y})\sigma_i - \phi(\sigma_i)\right)\left(\phi(\sigma_i) - \underline{\delta}_{\text{loc}}(\underline{y}, \overline{y})\sigma_i\right) \geq 0 \tag{19}$$

with $\underline{\delta} \leq \underline{\delta}_{\text{loc}}(\underline{y}, \overline{y}) \leq \overline{\delta}_{\text{loc}}(\underline{y}, \overline{y}) \leq \overline{\delta}$, with the global sector bounds as in (2a) satisfied with $\underline{\delta}$ and $\overline{\delta}$. Similarly, we assume $\forall \sigma_i, \sigma_j \in [\underline{y}, \overline{y}]$

$$s_{\text{slo,loc}}(\sigma_i, \sigma_j) := \left(\overline{\beta}_{\text{loc}}(\underline{y}, \overline{y})(\sigma_i - \sigma_j) - (\phi_i - \phi_j)\right) \times \left((\phi_i - \phi_j) - \underline{\beta}_{\text{loc}}(\underline{y}, \overline{y})(\sigma_i - \sigma_j)\right) \geq 0 \tag{20}$$

with $0 \leq \underline{\beta}_{\text{loc}}(\underline{y}, \overline{y}) \leq \overline{\beta}_{\text{loc}}(\underline{y}, \overline{y}) \leq \overline{\beta}$, with the global sector bounds as in (2b) satisfied with $\underline{\beta} = 0$ and $\overline{\beta}$. The use of sector and slope bounds depending on $\underline{y}$ and $\overline{y}$ can help reduce the conservatism in the estimates of the region of attraction obtained, as the numerical examples below will illustrate.

To guarantee that the above sector and slope inequalities are verified for all trajectories starting in an invariant level set of (5), we should establish a condition for the inclusion of a level set

Authorized licensed use limited to: UNIVERSITAETSBIBL STUTTGART. Downloaded on September 29,2025 at 08:51:42 UTC from IEEE Xplore. Restrictions apply.

of (5) in a given set $\mathcal{X}_0 \subset \mathbb{R}^n$. The lemma below provides this inclusion condition.

Lemma 2: Given a function $W : \mathbb{R}^n \to \mathbb{R}$, if there exists a scalar $\alpha > 0$ such that

$$\alpha(\overline{y} - \nu_0(x))(\nu_0(x) - \underline{y}) \geq \rho - W(x) \tag{21}$$

then the following set inclusion holds:

$$\mathcal{E}(W, \rho) \subseteq \mathcal{X}_0.$$

Proof: If (21) holds, then whenever $W(x) \leq \rho$, we have that the inequality $(\overline{y} - \nu_0(x))(\nu_0(x) - \underline{y}) \geq 0$ is satisfied. Hence, $x \in \mathcal{E}(W, \rho) \subseteq \mathcal{X}_0$, giving the set inclusion. ■

The inclusion condition of Lemma 2 and the stability conditions of Theorem 1 are combined in the following regional stability analysis result.

Theorem 2: Consider the Lurie system of (1) with the nonlinearity ϕ both sector bounded (2a) and slope restricted (2b) with $\underline{\beta} \geq 0$ and bounds on the nonlinearity $\underline{y}$, $\overline{y}$ defining the set $\mathcal{X}_0$ and sector and slope bounds as $\underline{\delta}_{\text{loc}}(\underline{y}, \overline{y})$, $\overline{\delta}_{\text{loc}}(\underline{y}, \overline{y})$, $\underline{\beta}_{\text{loc}}(\underline{y}, \overline{y})$, $\overline{\beta}_{\text{loc}}(\underline{y}, \overline{y})$ in (19) and (20).

If there exist $P \in \mathbb{S}^{n+N+1}$, $\{\lambda^p, \lambda^n\} \in \mathbb{R}^{N+1}_{\geq 0}$, $\{\tau^{\text{sec}}, \psi^{\text{sec}}, \theta^{\text{sec}}\} \in \mathbb{R}^{N+1}_{\geq 0}$, $\{\tau^{\text{slo}}, \psi^{\text{slo}}, \theta^{\text{slo}}\} \in \mathbb{U}^{N+1}_{\geq 0}$, and $\epsilon_2 \geq \epsilon_1 > 0$, and $\epsilon_3 > 0$ such that, $\forall x \in \mathbb{R}^n \setminus \{0\}$, the inequalities in (16) hold with

$$\underline{V}(x) = V_0(\xi_N) + \sum_{j=0}^{N} \lambda_j^p L(0, \nu_j) - \lambda_j^n U(0, \nu_j) - \sum_{j=0}^{N} \tau_j^{\text{sec}} s_{\text{sec,loc}}(\nu_j) - \sum_{j=0}^{N-1} \sum_{g=j+1}^{N} \tau_{j,g}^{\text{slo}} s_{\text{slo,loc}}(\nu_j, \nu_g) \tag{22a}$$

$$\overline{V}(x) = V_0(\xi_N) + \sum_{j=0}^{N} \lambda_j^p U(0, \nu_j) - \lambda_j^n L(0, \nu_j) + \sum_{j=0}^{N} \psi_j^{\text{sec}} s_{\text{sec,loc}}(\nu_j) + \sum_{j=0}^{N-1} \sum_{g=j+1}^{N} \psi_{j,g}^{\text{slo}} s_{\text{slo,loc}}(\nu_j, \nu_g) \tag{22b}$$

$$\overline{\Delta V}(x) = \Delta V_0(\xi_N) + \sum_{j=0}^{N} \lambda_j^p U(\nu_j, \nu_{j+1}) - \lambda_j^n L(\nu_j, \nu_{j+1}) + \sum_{j=0}^{N+1} \theta_j^{\text{sec}} s_{\text{sec,loc}}(\nu_j) + \sum_{j=0}^{N} \sum_{g=j+1}^{N+1} \theta_{j,g}^{\text{slo}} s_{\text{slo,loc}}(\nu_j, \nu_g) \tag{22c}$$

and a scalar $\alpha > 0$ such that

$$\alpha(\overline{y} - \nu_0(x))(\nu_0(x) - \underline{y}) \geq \rho - \underline{V}(x) \, \forall x \in \mathbb{R}^n \setminus \{0\} \tag{23}$$

holds, then all solutions of (1) satisfying $x[0] \in \mathcal{E}(V, \rho) \subseteq \mathcal{X}_0$, with V defined by P and $\lambda = \lambda^p - \lambda^n$, also satisfy $\mathcal{E}(V(x[k]), \rho) \subseteq \mathcal{X}_0$ for all $k \in \mathbb{N}$. Moreover, the origin of (1) is (locally) exponentially stable.

Proof: Since we have $V(x) \geq \underline{V}(x)$, then $V(x) \leq \rho$ implies $\underline{V}(x) \leq \rho$ hence $\mathcal{E}(V, \rho) \subseteq \mathcal{E}(\underline{V}, \rho)$. Following Lemma 2, if (23) holds, we conclude that $\mathcal{E}(\underline{V}, \rho) \subseteq \mathcal{X}_0$ thus implying $\mathcal{E}(V, \rho) \subseteq \mathcal{X}_0$.

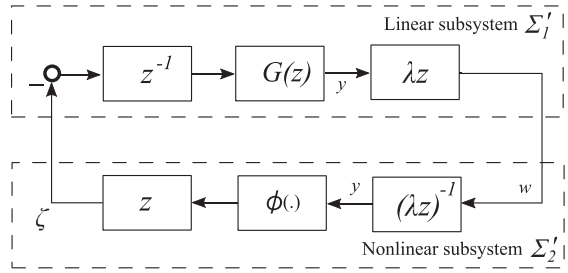

Fig. 3. Feedback system used in the passivity analysis of $V_{\text{GJD}}(x)$.

Note also that if (16) holds, we have $\underline{V}(x) > 0$, giving $V(x[0]) > 0$ and $\overline{\Delta V}(x) < 0$ gives $\Delta V(x[k]) < 0 \, \forall k \in \mathbb{N}$. Thus, for $V(x[0]) \leq \rho$ we obtain $0 < V(x[k]) \leq \rho \, \forall k \in \mathbb{N}$. Since $\underline{V}(x) \leq V(x)$, we also have that $\underline{V}(x[k]) \leq \rho \, \forall k \in \mathbb{N}$. Hence, the set $\mathcal{E}(V, \rho)$ is invariant and is contained in the set, where $\Delta V(x)$ is strictly negative with an upper quadratic bound as in (16c). Exponential stability of the origin within the set $\mathcal{E}(V, \rho)$ can then be concluded. ■

Remark 4: The following particular case of the function (5) has been proposed in [7]:

$$V_{\text{GJD}}(x) = x^T P x + \lambda \nu_0 \phi(\nu_0)$$

for the regional analysis of Lurie systems. Interestingly, with the above structure the stability analysis can be carried out using only sector bounds. Also, the level sets of the above function can be disconnected therefore yielding disconnected level sets for estimates of the region of attraction.

On the other hand, the above function does not appear to be more effective than a quadratic function when assessing global stability in numerical experiments. To understand this apparent conservatism in using V_{GJD} for global stability analysis, let us consider the feedback loop of Fig. 3 , where the multipliers z^{-1} and λz (as well as their inverses) have been added to the Lurie system of 1. The passivity analysis of this reformulated feedback system is now considered, with the Lyapunov function V_{GJD} being constructed from the sum of each subsystem's storage function, as done in Section II-B2. Focusing first on the lower, nonlinear subsystem Σ_2', the corresponding supply rate is

$$w[k]\zeta[k] = \lambda \phi(y[k+1]) y[k+1]. \tag{24}$$

The term $S_{\text{pass}}(y[k]) = \lambda y[k] \phi(y[k])$ [corresponding to the term $\lambda \nu_0 \phi(\nu_0)$ using the notation of (3)] in $V_{\text{GJD}}(x[k])$ can then be used as a storage function for this subsystem, since

$$\Delta S_{\text{pass}}(y[k]) = \lambda \left(\phi(y[k+1]) y[k+1] - \phi(y[k]) y[k] \right) \tag{25a}$$

$$\leq \lambda \phi(y[k+1]) y[k+1] \tag{25b}$$

$$= w[k]\zeta[k], \tag{25c}$$

thus showing the passivity of this subsystem.

For the upper, linear subsystem Σ_1', the system is passive if $\lambda z z^{-1} G(z) = \lambda G(z)$ is strictly positive real. The key feature here is the cancellation of the two multipliers for the linear system, denying the multipliers any phase shift on $G(z)$. Since positive-realness of $\lambda G(z)$ is equivalent to $G(z)$ when $\lambda \geq 0$, this approach will be equivalent to the circle criterion, whose satisfaction implies the existence of a quadratic Lyapunov function $x[k]^T P x[k]$. Thus, for a global analysis, the benefit of

Authorized licensed use limited to: UNIVERSITAETSBIBL STUTTGART. Downloaded on September 29,2025 at 08:51:42 UTC from IEEE Xplore. Restrictions apply.

including the second term in $V_{\text{GJD}}(x)$ may be limited, although the inequality (25b) in the above analysis prevents a direct equivalence between the use of V_{GJD} and the circle criterion. However, the regional analysis using V_{GJD} may prove beneficial when the basin of attraction is a complex set and not $\mathbb{R}^n$.

C. Input–Output Analysis

This section considers the open Lurie system

$$x[k+1] = Ax[k] + B\phi(y[k]) + B_w w[k] \tag{26a}$$
$$y[k] = Cx[k] \tag{26b}$$
$$z[k] = C_z x[k] \tag{26c}$$

with the input given by an external disturbance $w \in \mathcal{W} \subseteq \ell_2$, and z a performance output signal to be assessed. To evaluate the impact of the input signals w in z, in this section, we propose a strategy to compute gains yielding worst-case bounds of the form $\|z\|_2 \leqslant \gamma\|w\|_2$.

To compute the input–output induced gains, we use the storage function given by V as in (5). It is important to observe that (5) *does not depend* on w, since ν_i, $i \in \{1, N\}$ in (3) and the vector ξ_N in (4) defining the expression $V(x)$ depend only on its argument x and not on w. On the other hand, to analyze the input–output gains of (26), the forward difference $\Delta V(x[k]) = V(x[k+1]) - V(x[k])$ has to be computed using $x[k+1]$ as in (26). To obtain $V(x[k+1])$, we use (3) and (26a) to arrive at the expressions

$$\nu_j(x[k+1]) = \begin{cases} C\left(Ax[k] + B\phi(Cx[k]) + B_w w[k]\right) & j = 0 \\ CA^j\left(Ax[k] + B\phi(Cx[k]) + B_w w[k]\right) & \\ + \sum_{i=1}^{j} CA^{j-i}B\phi(\nu_{i-1}(x[k+1])), & 1 \leq j \leq N. \end{cases}$$

It is observed that $\nu_j(x[k+1])$ depends on $w[k]$, which is different from $\nu_{j+1}(x[k])$. Let us define $\nu_j^+(x[k], w[k]) := \nu_j(x[k+1])$ that will help avoid expressions with multiple indexing. Using the above expression, we obtain

$$\nu_j^+(x, w) = \begin{cases} C\left(Ax + B\phi(\nu_0) + B_w w\right), & j = 0 \\ CA^j\left(Ax + B\phi(\nu_0) + B_w w\right) + \sum_{i=1}^{j} CA^{j-i}B\phi(\nu_{i-1}^+), & \\ & 1 \leq j \leq N \end{cases}$$

and $\xi_N^+(x[k], w[k]) := \xi_N(x[k+1])$, that is

$$\xi_N^+(x, w) = \left[x^{+\top}, \quad \phi(\nu_0^+), \quad \ldots, \quad \phi(\nu_N^+)\right]. \tag{27}$$

Theorem 3: Consider the open Lurie system of (26) with the nonlinearity ϕ both sector bounded (2a) and slope restricted (2b) with $\underline{\beta} \geq 0$. If there exist $P \in \mathbb{S}^{n+N+1}$, $\{\lambda^p, \lambda^n\} \in \mathbb{R}_{\geq 0}^{N+1}$, $\{\tau^{\text{sec}}, \psi^{\text{sec}}, \theta^{\text{sec}}, \theta^{\text{sec+}}\} \in \mathbb{R}_{\geq 0}^{N+1}$, $\{\tau^{\text{slo}}, \psi^{\text{slo}}, \theta^{\text{slo}}, \theta^{\text{slo+}}\} \in \mathbb{U}_{\geq 0}^{N+1}$ $\epsilon_2 \geq \epsilon_1 > 0$, and $\epsilon_3 > 0$ such that, $\forall x \in \mathbb{R}^n \setminus \{0\}$, (16a)-(16b) hold with (17a)-(17b), and $\overline{\Delta V}(x) \leq -\left(\gamma^{-2}\right) z^2 + w^2$, with $\overline{\Delta V}(x)$ given by

$$\begin{aligned}\overline{\Delta V}(x) &= \xi_N^+(x)^\top P \xi_N^+(x) - \xi_N(x)^\top P \xi_N(x) \\ &\quad + \sum_{j=0}^{N} \lambda_j^p U\left(\nu_j, \nu_j^+\right) - \lambda_j^n L\left(\nu_j, \nu_j^+\right) \\ &\quad + \sum_{j=1}^{N} \theta_j^{\text{sec}} s_{\text{sec}}\left(\nu_j\right) + \theta_j^{\text{sec+}} s_{\text{sec}}\left(\nu_j^+\right) \\ &\quad + \sum_{j=1}^{N-1} \sum_{g=j+1}^{N} \theta_{j,g}^{\text{slo}} s_{\text{slo}}\left(\nu_j, \nu_g\right) + \theta_{j,g}^{\text{slo+}} s_{\text{slo}}\left(\nu_j^+, \nu_g^+\right)\end{aligned} \tag{28}$$

then

$$\|z\|_2 \leq \gamma\|w\|_2 \qquad \forall w \in \ell_2. \tag{29}$$

Moreover, for $x[0] = 0$, we have that $V(x[k]) \leq \|w\|_2^2, \forall k \in \mathbb{N}$.

Proof: Since $\Delta V \leq \overline{\Delta V}(x)$ then the conditions of the theorem imply $\Delta V(x[k]) \leq -\left(\gamma^{-2}\right) z[k]^2 + w[k]^2$ $\forall k \in \mathbb{N}$. Summing this expression from to 0 to k gives

$$V(x[k]) - V(x[0]) \leq -\left(\gamma^{-2}\right) \sum_{i=0}^{k} \|z\|_2 + \sum_{i=0}^{k} \|w\|_2 \quad \forall k.$$

Letting $k \to \infty$, we get $\left(\gamma^{-2}\right) \|z\|_2^2 \leq V(x[0]) + \|w\|_2^2$ and since the bias term $V(x[0])$ satisfies $V(x[0]) \geq 0$, then

$$\|z\|_2 \leq \gamma\|w\|_2.$$

That is, the input–output induced ℓ_2 gain is bounded by γ.

Moreover, we have that

$$V(x[k]) + \sum_{i=0}^{k} \left(\gamma^{-2}\right) \|z[i]\|^2 \leq V(x[0]) + \sum_{i=0}^{k} \|w[i]\|^2 \quad \forall k$$

and since $\|z[i]\| \geq 0 \, \forall i$, if $x[0] = 0$ (thus $V(x[0]) = 0$), we obtain

$$V(x[k]) \leq \sum_{i=0}^{k} \|w[i]\|^2 \leq \sum_{i=0}^{\infty} \|w[i]\|^2 = \|w\|_2^2 \quad \forall k.$$

We thus conclude that, if $\|w\|_2^2 \leq \rho$, that is, if the ℓ_2 norm of the input is bounded by a scalar $\sqrt{\rho}$, we have that $\forall k \in \mathbb{N}$, $x[k] \in \mathcal{E}(V, \rho)$. ■

IV. Numerical Examples

The proposed Lyapunov function structure is now evaluated through three numerical examples:

1) assessing the maximal achievable sector for a global analysis using benchmark LTI systems from the literature;
2) computing estimates of the region of attraction; and
3) computing bounds for the worst-case input–output gains.

The LMIs corresponding to each stability conditions were solved using YALMIP [13] and MOSEK [2].

A. Maximum Achievable Sector

We first evaluate the conditions for global stability of system (1) using (5) on minimal realizations of the seven systems given in Table I with equal sector and slope bounds, as in $\underline{\delta} = \underline{\beta} = 0$, and $\overline{\beta} = \overline{\delta}$. We then look for the maximum value of $\overline{\delta}$ for which stability could be verified. The tests were carried out by using a sequence of increasing values of the integer N.

Table II compares the maximum achievable $\overline{\delta}$ obtained by solving the inequalities in Theorem 1 against other modern

Authorized licensed use limited to: UNIVERSITAETSBIBL STUTTGART. Downloaded on September 29,2025 at 08:51:42 UTC from IEEE Xplore. Restrictions apply.

TABLE I
VARIOUS LINEAR SYSTEMS USED AS TESTS IN THE NUMERICAL EXAMPLES.

Example	Plant
$G_1(z)$ [1]	$\frac{0.1z}{z^2-1.8z+0.81}$
$G_2(z)$ [1]	$\frac{z^3-1.95z^2+0.9z+0.05}{z^4-2.8z^3+3.5z^2-2.412z+0.7209}$
$G_3(z)$ [1]	$-\frac{z^3-1.95z^2+0.9z+0.05}{z^4-2.8z^3+3.5z^2-2.412z+0.7209}$
$G_4(z)$ [1]	$\frac{z^4-1.5z^3+0.5z^2-0.5z+0.5}{4.4z^5-8.957z^4+9.893z^3-5.671z^2+2.207z-0.5}$
$G_5(z)$ [1]	$\frac{-0.5z+0.1}{z^3-0.9z^2+0.79z+0.089}$
$G_6(z)$ [9]	$\frac{2z+0.092}{z^2-0.5z}$
$G_7(z)$ [3]	$\frac{1.341z^4-1.221z^3+0.6285z^2-0.5618z+0.1993}{z^5-0.935z^4+0.7697z^3-1.118z^2+0.6917z-0.1352}$

Set of examples taken from [3].

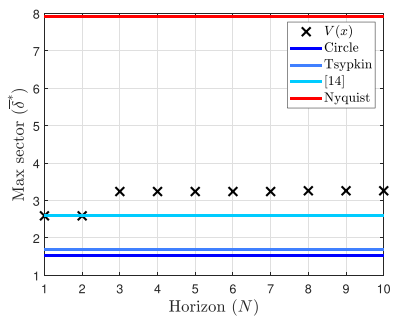

Fig. 4. Maximum sector $\overline{\delta}$ obtained by Theorem 1 for $G_4(z)$ as a function of $N \in [1, 10]$. Also plotted are the bounds from the Circle criterion, the Tsypkin Lyapunov function and the function from [15]. The upper limit set by the Nyquist gain is also plotted.

methods, including the Zames–Falb multipliers of [3] and [22], and the Lyapunov functions of [15] and [1].

For $G_2(z)$, $G_3(z)$, and $G_4(z)$, the proposed Lyapunov function $V(x)$ provides less conservative sector bounds $\overline{\delta}$ than the Lyapunov function $\hat{V}(x)$ from [15], as in (9). Furthermore, as discussed in Remark 1, the sector bounds obtained with $V(x)$ and $N = 1$ match those obtained with $\hat{V}(x)$. Thus showing that V could encompass and generalize $\hat{V}$. For $G_2(z)$, $G_3(z)$, and $G_4(z)$, extending the *horizon length* N of V beyond $N = 1$ led to some conservatism reduction in the achievable sector $\overline{\delta}$, with the horizon length yielding the maximum achievable sector (N^*) reported in Table II. Fig. 4 illustrates the effect of the horizon length N on the achievable sector by showing the maximum achievable sector bound $\overline{\delta}^*$ for $G_4(z)$ as a function of the horizon length N, with a clear increase at $N = 3$. It must also be said that the Zames–Falb multipliers of [3] and [22] could still achieve superior sector bounds for $G_4(z)$, $G_5(z)$, and $G_7(z)$, however, the Lyapunov function approach for stability analysis considered in this article still offers advantages. In particular, Lyapunov functions provide a more natural framework to conduct a regional analysis.

Remark 5: Since the number of decision variables in (16) scales with $\mathcal{O}((n+N)^2)$, computational limitations were not found to be a major issue when verifying Theorem 1 for modestly sized problems. In fact, for the examples of Table I, the maximum time taken to solve the LMIs of Theorem 1 on a standard laptop (with 16 GB of RAM and an Intel(R) Core(TM) i7-1185G7 processor) was 5.46 s, which corresponded to $G_4(z)$ with $N = 20$. However, the $\mathcal{O}((n+N)^2)$ scaling may limit the extension of the results presented here for MIMO problems or for large dimensional systems.

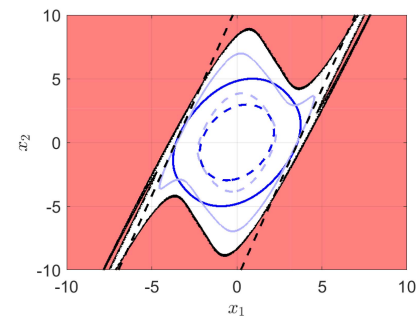

Fig. 5. Regional stability of the second numerical example. Positive invariant sets of the Lyapunov function $V(x)$ from (5) are shown in blue, with blue dashed lines corresponding to sublevel sets. Light blue corresponds to $N = 4$ and dark blue to $N = 1$. Black dashed lines denote the limits $\{x : \nu_0(x) = \overline{y}, \nu_0(x) = \underline{y}\}$. Initial conditions from the red region did not converge to the origin.

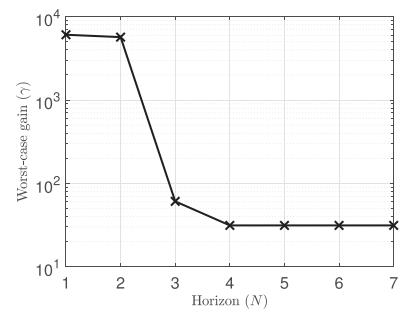

Fig. 6. Worst-case input output gain γ bounding $\|z\|_2 \leq \gamma\|w\|_2$ as a function of the horizon length N in $V(x)$.

B. Regional Analysis

The second numerical example uses $V(x)$ from (5) to estimate the region of attraction of the Lurie system (1). Consider a balanced realization of the plant $G_6(z)$ from Table I, the polynomial

$$p(\sigma) = c\sigma(\sigma - r_1)(\sigma + r_1)(\sigma - r_2)(\sigma + r_2)$$

and

$$\underline{\beta}_p(\underline{y}, \overline{y}) = \min_{\sigma \in [\underline{y}, \overline{y}]} \frac{dp(\sigma)}{d\sigma}$$

defining the nonlinearity

$$\phi(\sigma) = p(\sigma) - \underline{\beta}_p(\underline{y}, \overline{y})\sigma.$$

Note that ϕ above is monotonic in the interval $[\underline{y}, \overline{y}]$ and it is sector bounded and slope restricted with

$$\underline{\delta}_{\text{loc}}(\underline{y}, \overline{y}) = \min_{\sigma \in [\underline{y}, \overline{y}]} \frac{\phi(\sigma)}{\sigma}, \ \overline{\delta}_{\text{loc}}(\underline{y}, \overline{y}) = \max_{\sigma \in [\underline{y}, \overline{y}]} \frac{\phi(\sigma)}{\sigma}$$

$$\underline{\beta}_{\text{loc}}(\underline{y}, \overline{y}) = 0, \ \overline{\beta}_{\text{loc}}(\underline{y}, \overline{y}) = \max_{\sigma \in [\underline{y}, \overline{y}]} \frac{d\phi(\sigma)}{d\sigma}.$$

Since the nonlinearity ϕ is a polynomial, the terms $\phi(\nu_j(x))$ in the vector ξ_N and the integrals of (5) also become polynomials on the variable x. In the following, the parameters of the

Authorized licensed use limited to: UNIVERSITAETSBIBL STUTTGART. Downloaded on September 29,2025 at 08:51:42 UTC from IEEE Xplore. Restrictions apply.

TABLE II
ACHIEVABLE MAXIMUM SECTOR BOUNDS $\overline{\delta}$ FOR VARIOUS TESTS.

	Maximum sector $\overline{\delta}$						
Plant	$G_1(z)$	$G_2(z)$	$G_3(z)$	$G_4(z)$	$G_5(z)$	$G_6(z)$	$G_7(z)$
Lyapunov functions							
Circle criterion [20]	0.7934	0.1984	0.1379	1.5313	1.0273	0.6510	0.1069
Tspkin criterion [10]	3.8000	0.2427	0.1379	1.6911	1.0273	0.6510	0.1069
Ahmad et al. [1]	12.4309	0.7261	0.3027	2.5904	2.4475	0.9067	0.1695
Park et al. [15]	12.9960	0.7397	0.3054	2.5904	2.4475	0.9108	0.1695
Zames–Falb multipliers							
Best in [22]	3.9043	0.4365	0.2063	3.0192	2.4451	1.0236	0.2337
Best in [3]	13.0283	0.8027	0.3120	3.8240	2.4475	0.9115	0.4922
New theorem							
Theorem 1, $N = 1$	12.9960	0.7397	0.3054	2.5903	2.4475	0.9108	0.1695
Theorem 1 (N^*)	12.9960(1)	0.7935(7)	0.3119(8)	3.2663(3)	2.4475(1)	0.9108(1)	0.1696(19)
Upper limit							
Nyquist gain	36.1000	2.7455	0.3126	7.9070	2.4475	1.0870	1.1766

N^* is the value of N in $V(x)$ of (5) giving the maximum sector.

nonlinearity and the interval were set to $r_1 = 1$, $r_2 = 2$, $c = 8 \times 10^{-3}$, and $\overline{y} = -\underline{y} = 5.28$.

We formulate a semidefinite program using the inequalities in Theorem 2. To optimize the estimates of the region of attraction, we used the trace of the quadratic matrix defining $\underline{V}$ as the cost function. Fig. 5 shows the estimates of the obtained region of attractions—denoted by the blue curves in the figure obtained for horizon lengths $N = 1$ (dark blue) and $N = 4$ (light blue), with the blue dashed lines being sublevel sets of the corresponding $V(x)$. The red area displays the set of initial values generating trajectories that did not converge to the origin and the black dashed lines correspond to $\{x : \nu_0(x) = \underline{y}, \nu_0(x) = \overline{y}\}$. The figure shows that increasing the horizon length N in $V(x)$ can generate nonconvex estimates of the region of attraction with larger volumes than those obtained using ellipsoidal sets.

C. Bounding the Worst Case Input–Output Gain

The final numerical example highlights the use of $V(x)$ in (5) for bounding the worst-case input–output gain of the Lurie system (26). Consider a balanced realization (A, B, C) of $G_4(z)$ from Table I and assume a global analysis (so $\mathcal{X}_0 = \mathbb{R}^n$). Furthermore, assume that the nonlinearity is bounded by $\overline{\delta} = \overline{\beta} = 2.55$ and $\underline{\delta} = \underline{\beta} = 0$ and take $B_w = B$ (as in the input vector of the disturbance equals that of the nonlinearity) and, similarly, $C_z = C$.

Fig. 6 shows the computed values of γ from Theorem 3 defining the worst-case bound $\|z\|_2 \leq \gamma \|w\|_2$ for all $\|w\|_2 \in \ell_2$ as a function of the horizon length N of $V(x)$. As N increased, there was a significant drop in γ, going from 6.08×10^3 with $N = 1$ to 3.13×10^1 at $N = 4$ before reaching a plateau. This noticeable drop in γ suggests that longer horizons N in $V(x)$ may prove important for generating tight bounds of the input–output gains of Lurie systems. These significant improvements with long horizon lengths N contrast with the results of the maximum sector analysis of Section IV-A, where the impact of increasing N was less noticeable.

V. CONCLUSION

The absolute stability problem for discrete-time Lurie systems with monotonic nonlinearities was considered. A class of Lyapunov functions composed of a generalized quadratic term plus a sum of Lurie–Postnikov-type integral terms was proposed. It was shown that sign-definiteness of both the quadratic matrix of the Lyapunov function and the scalars in front of the various integral terms could be relaxed. It was also shown that the proposed Lyapunov function generalized existing Lyapunov function structures and its derivation from applying passivity theory to the feedback Lurie system was discussed. Numerical examples demonstrated the value of the proposed candidate Lyapunov functions for 1) increasing the maximum achievable sector bound for verifying global stability, 2) estimating the region of attraction of the Lurie system, and 3) bounding the worst-case input–output gain of the system.

APPENDIX

We present below the matrix inequalities allowing the conditions of Theorem 1 to be verified. We have that (16a), (16b), and (16c) hold if, respectively,

$$\begin{aligned} &P - \mathrm{diag}(\epsilon_1 I_n, 0_{N\times N}) + \Omega^0_{\mathrm{LU}}(N, \lambda^p, \lambda^n) \\ &\quad -\Omega_{\mathrm{sec}}(N, \tau^{\mathrm{sec}}) - \Omega_{\mathrm{slo}}(N, \tau^{\mathrm{slo}}) \geq 0 \end{aligned} \tag{30}$$

$$\begin{aligned} &\mathrm{diag}(\epsilon_2 I_n, 0_{N\times N}) - P - \Omega^0_{\mathrm{UL}}(N, \lambda^p, \lambda^n) \\ &\quad -\Omega_{\mathrm{sec}}(N, \psi^{\mathrm{sec}}) - \Omega_{\mathrm{slo}}(N, \psi^{\mathrm{slo}}) \geq 0 \end{aligned} \tag{31}$$

$$\begin{aligned} &-(\check{\Omega}^\top P \check{\Omega} - \mathrm{diag}(P, 0) - \mathrm{diag}(\epsilon_3 I_n, 0_{N+1\times N+1}) \\ &\quad +\Omega_{\mathrm{UL}}(N, \lambda^p, \lambda^n) \\ &\quad +\Omega_{\mathrm{sec}}(N+1, \theta^{\mathrm{sec}}) + \Omega_{\mathrm{slo}}(N+1, \theta^{\mathrm{slo}})) \geq 0 \end{aligned} \tag{32}$$

where

$$\check{\Omega} = \begin{bmatrix} A & \begin{bmatrix} B & 0_{n\times N} \end{bmatrix} \\ 0_{N\times n} & \begin{bmatrix} 0_{N\times 1} & I_N \end{bmatrix} \end{bmatrix}$$

r and the matrices Ω^0_{LU}, Ω^0_{UL}, Ω_{UL}, Ω_{sec}, and Ω_{slo} are given as follows:

Authorized licensed use limited to: UNIVERSITAETSBIBL STUTTGART. Downloaded on September 29,2025 at 08:51:42 UTC from IEEE Xplore. Restrictions apply.

$$\sum_{j=0}^{N} \tau_j^{\text{sec}} s_{\text{sec}}(\nu_j) = \xi_N^\top \Omega_{\text{sec}}(N, \tau^{\text{sec}}) \xi_N \qquad \Omega_{\text{sec}}(N, \tau^{\text{sec}}) = \frac{1}{2} \sum_{j=0}^{N} \tau_j^{\text{sec}} He\left(\Omega_{\text{sec},j}\right) \tag{33a}$$

$$\Omega_{\text{sec},j} = \begin{bmatrix} 0_{n+j\times n+N+1} \\ \left[(\overline{\delta}+\underline{\delta}) \begin{bmatrix} CA^j & CA^{j-1}B & \dots & CA^0B \end{bmatrix} \quad -1 \quad 0_{1\times N+1-j}\right] \\ 0_{n+(N-j)\times n+N+1} \end{bmatrix}$$
$$-\overline{\delta}\underline{\delta} \begin{bmatrix} \begin{bmatrix} (CA^j)^\top \\ (CA^{j-1}B)^\top \\ \vdots \\ (CA^0B)^\top \end{bmatrix} \\ 0_{N-j\times 1} \end{bmatrix} \left[\begin{bmatrix} CA^j & CA^{j-1}B & \dots & CA^0B \end{bmatrix} \quad 0_{1\times N-j}\right] \tag{33b}$$

$$\sum_{j=0}^{N-1} \sum_{g=j+1}^{N} \tau_{j,g}^{\text{slo}} s_{\text{slo}}(\nu_j, \nu_g) = \xi_N^\top \Omega_{\text{slo}}(N, \tau^{\text{slo}}) \xi_N \qquad \Omega_{\text{slo}}(N, \tau^{\text{slo}}) = \frac{1}{2} \sum_{j=0}^{N-1} \sum_{g=j+1}^{N} \tau_{j,g}^{\text{slo}} He\left(\Omega_{\text{slo},j,g}\right) \tag{33c}$$

$$\Omega_{\text{slo},j,g} = \left(\begin{bmatrix} 0_{n+j\times n+N+1} \\ \left[\overline{\beta} \begin{bmatrix} CA^j & CA^{j-1}B & \dots & CA^0B \end{bmatrix} \quad 0_{1\times N-j}\right] \\ 0_{n+(N-j)\times n+N+1} \end{bmatrix} - \begin{bmatrix} 0_{n+g\times n+N+1} \\ \left[\overline{\beta} \begin{bmatrix} CA^g & CA^{g-1}B & \dots & CA^0B \end{bmatrix} \quad 0_{1\times N-g}\right] \\ 0_{n+(N-g)\times n+N+1} \end{bmatrix} \right.$$
$$\left. \begin{bmatrix} 0_{n+j\times n+N+1} \\ \begin{bmatrix} 0_{1\times n} & \mathbf{e}_{j+1}^{(N+1)\top} \end{bmatrix} \\ 0_{n+(N-j)\times n+N+1} \end{bmatrix}^\top - \begin{bmatrix} 0_{n+g\times n+N+1} \\ \begin{bmatrix} 0_{1\times n} & \mathbf{e}_{g+1}^{(N+1)\top} \end{bmatrix} \\ 0_{n+(N-g)\times n+N+1} \end{bmatrix}^\top \right) \left(\begin{bmatrix} 0_{n+j\times n+N+1} \\ \begin{bmatrix} 0_{1\times n} & \mathbf{e}_{j+1}^{(N+1)\top} \end{bmatrix} \\ 0_{n+(N-j)\times n+N+1} \end{bmatrix} - \begin{bmatrix} 0_{n+g\times n+N+1} \\ \begin{bmatrix} 0_{1\times n} & \mathbf{e}_{g+1}^{(N+1)\top} \end{bmatrix} \\ 0_{n+(N-g)\times n+N+1} \end{bmatrix} \right) \tag{33d}$$

$$\sum_{j=0}^{N} \lambda_j^p L(0, \nu_j) - \lambda_j^n U(0, \nu_j) = \xi_N^\top \Omega_{\text{LU}}^0(N, \lambda^p, \lambda^n) \xi_N \qquad \Omega_{\text{LU}}^0(N, \lambda^p, \lambda^n) = \frac{1}{2} \sum_{j=0}^{N} He\left(\Omega_{\text{LU},j}^0\right) \tag{33e}$$

$$\Omega_{\text{LU},j}^0 = \begin{bmatrix} 0_{n+j\times n+N+1} \\ \left[-\lambda_j^n \begin{bmatrix} CA^j & CA^{j-1}B & \dots & CA^0B \end{bmatrix} \quad \frac{1}{2\overline{\beta}}(\lambda_j^p + \lambda_j^n) \quad 0_{1\times N-j}\right] \\ 0_{n+(N-j)\times n+N+1} \end{bmatrix} \tag{33f}$$

$$\sum_{j=0}^{N} \lambda_j^p U(0, \nu_j) - \lambda_j^n L(0, \nu_j) = \xi_N^\top \Omega_{\text{UL}}^0(N, \lambda^p, \lambda^n) \xi_N \qquad \Omega_{\text{UL}}^0(N, \lambda^p, \lambda^n) = \frac{1}{2} \sum_{j=0}^{N} He\left(\Omega_{\text{UL},j}^0\right) \tag{33g}$$

$$\Omega_{\text{UL},j}^0 = \begin{bmatrix} 0_{n+j\times n+N+1} \\ \left[\lambda_j^p \begin{bmatrix} CA^j & CA^{j-1}B & \dots & CA^0B \end{bmatrix} \quad -\frac{1}{2\overline{\gamma}}(\lambda_j^p + \lambda_j^n) \quad 0_{1\times N-j}\right] \\ 0_{n+(N-j),\times n+N+1} \end{bmatrix} \tag{33h}$$

$$\sum_{j=0}^{N} \lambda_j^p U(\nu_j, \nu_{j+1}) - \lambda_j^n L(\nu_j, \nu_{j+1}) = \xi_N^\top \Omega_{\text{UL}}(N, \lambda^p, \lambda^n) \xi_N \qquad \Omega_{\text{UL}}(N, \lambda^p, \lambda^n) = \frac{1}{2} \sum_{j=0}^{N} He\left(\Omega_{\text{UL},j}\right) \tag{33i}$$

$$\Omega_{\text{UL},j} = \begin{bmatrix} 0_{n+j\times n+N+1} \\ \left[-\lambda_j^n \begin{bmatrix} C(A^{j+1}-A^j) & C(A^j-A^{j-1})B & \dots & C(A-I_n)B \end{bmatrix} \quad -\lambda_j^n CA^0B - \frac{1}{2\overline{\beta}}(\lambda_j^p + \lambda_j^n) \quad \frac{1}{\overline{\beta}}(\lambda_j^p + \lambda_j^n) \quad 0_{1\times N-j}\right] \\ \left[\lambda_j^p \begin{bmatrix} C(A^{j+1}-A^j) & C(A^j-A^{j-1})B & \dots & C(A-I_n)B & CA^0B \end{bmatrix} \quad -\frac{1}{2\overline{\beta}}(\lambda_j^p + \lambda_j^n) \quad 0_{1\times N-j}\right] \\ 0_{n+(N-j)\times n+N+1} \end{bmatrix}. \tag{33j}$$

References

[1] N. S. Ahmad, J. Carrasco, and W. P. Heath, "A less conservative LMI condition for stability of discrete-time systems with slope-restricted nonlinearities," *IEEE Trans. Autom. Control*, vol. 60, no. 6, pp. 1692–1697, Jun. 2015.

[2] M. ApS, "The MOSEK optimization toolbox for MATLAB manual. version 9.0.," 2019. [Online]. Available: http://docs.mosek.com/9.0/toolbox/index.html

[3] J. Carrasco, W. P. Heath, J. Zhang, N. S. Ahmad, and S. Wang, "Convex searches for discrete-time Zames–Falb multipliers," *IEEE Trans. Autom. Control*, vol. 65, no. 11, pp. 4538–4553, Nov. 2020.

Authorized licensed use limited to: UNIVERSITAETSBIBL STUTTGART. Downloaded on September 29,2025 at 08:51:42 UTC from IEEE Xplore. Restrictions apply.

[4] C. A. Desoer and M. Vidyasagar, *Feedback Systems: Input-Output Properties*. Philadelphia, PA, USA: SIAM, 1975.
[5] R. Drummond, S. Duncan, M. Turner, P. Pauli, and F. Allgower, "Bounding the difference between model predictive control and neural networks," in *Proc. Learn. Dyn. Control Conf.*, 2022, pp. 817–829.
[6] R. Drummond, G. Valmorbida, and S. R. Duncan, "Generalized absolute stability using Lyapunov functions with relaxed positivity conditions," *IEEE Contr. Syst. Lett.*, vol. 2, no. 2, pp. 207–212, Apr. 2018.
[7] C. A. Gonzaga, M. Jungers, and J. Daafouz, "Stability analysis of discrete-time Lur'e systems," *Automatica*, vol. 48, no. 9, pp. 2277–2283, 2012.
[8] D. Gramlich, C. Ebenbauer, and C. W. Scherer, "Synthesis of accelerated gradient algorithms for optimization and saddle point problems using Lyapunov functions and LMIs," *Syst. Control Lett.*, vol. 165, 2022, Art. no. 105271.
[9] W. P. Heath, J. Carrasco, and M. de La Sen, "Second-order counterexamples to the discrete-time Kalman conjecture," *Automatica*, vol. 60, pp. 140–144, 2015.
[10] V. Kapila and W. M. Haddad, "A multivariable extension of the tsypkin criterion using a Lyapunov-function approach," *IEEE Trans. Autom. Control*, vol. 41, no. 1, pp. 149–152, Jan. 1996.
[11] H. K. Khalil, *Nonlinear Systems*. Upper-Saddle River, NJ, USA: Prentice-Hall, 1996.
[12] L. Lessard, B. Recht, and A. Packard, "Analysis and design of optimization algorithms via integral quadratic constraints," *SIAM J. Optim.*, vol. 26, no. 1, pp. 57–95, 2016.
[13] J. Löfberg, "YALMIP : A toolbox for modeling and optimization in MATLAB," in *Proc IEEE. Int. Conf. Robot. Autom.*, 2004, pp. 284–289.
[14] B. Y. Park, P. Park, and N. K. Kwon, "An improved stability criterion for discrete-time lur'e systems with sector-and slope-restrictions," *Automatica*, vol. 51, pp. 255–258, 2015.
[15] J. Park, S. Y. Lee, and P. Park, "A less conservative stability criterion for discrete-time lur'e systems with sector and slope restrictions," *IEEE Trans. Autom. Control*, vol. 64, no. 10, pp. 4391–4395, Oct. 2019.
[16] P. Park and S. W. Kim, "A revisited tsypkin criterion for discrete-time nonlinear lur'e systems with monotonic sector-restrictions," *Automatica*, vol. 34, no. 11, pp. 1417–1420, 1998.
[17] P. Pauli, D. Gramlich, J. Berberich, and F. Allgöwer, "Linear systems with neural network nonlinearities: Improved stability analysis via acausal Zames–Falb multipliers," in *Proc. IEEE Conf. Decis. Control*, 2021, pp. 3611–3618.
[18] G. Szegö, "On the absolute stability of sampled-data control systems," *Proc. Nat. Acad. Sci. United States Amer.*, vol. 50, no. 3, pp. 558–560, 1963.
[19] Y. Tsypkin, "Fundamentals of the theory of non-linear pluse control systems," *IFAC Proc. Vol.*, vol. 1, pp. 172–180, 1963.
[20] Y. Z. Tsypkin, "On the stability in the large of nonlinear sampled-data systems," *Dokl. Akad. Nauk SSSR*, vol. 145, 1962, pp. 52–55.
[21] Y. Z. Tsypkin, "Frequency criteria for the absolute stability of nonlinear sampled-data systems," *Automatika i Telemekhanika*, vol. 25, no. 3, pp. 281–289, 1964.
[22] M. C. Turner and R. Drummond, "Discrete-time systems with slope restricted nonlinearities: Zames–Falb multiplier analysis using external positivity," *Int. J. Robust Nonlinear Control*, vol. 31, no. 6, pp. 2255–2273, 2021.
[23] G. Valmorbida, R. Drummond, and S. R. Duncan, "Regional analysis of slope-restricted Lurie systems," *IEEE Trans. Autom. Control*, vol. 64, no. 3, pp. 1201–1208, Mar. 2019.
[24] H. Yin, P. Seiler, and M. Arcak, "Stability analysis using quadratic constraints for systems with neural network controllers," *IEEE Trans. Autom. Control*, vol. 67, no. 4, pp. 1980–1987, Apr. 2022.
[25] J. Zhang and J. Carrasco, "A Lyapunov–Lurye functional parametrization of discrete-time Zames–Falb multipliers," *IEEE Control Syst. Lett.*, vol. 6, pp. 259–264, 2021.

Ross Drummond received the D.Phil. degree in the control group from the University of Oxford, Oxford, U.K., in 2017.

He held a postdoctoral research assistant position at University of Oxford until 2020. He is currently with the University of Sheffield and a U.K. Intelligence Community Research Fellow sponsored by the Royal Academy of Engineering. His main research interests include modeling lithium ion batteries, developing stability criteria for nonlinear systems, characterizing externally positive linear systems, and providing robustness certificates for neural networks.

Giorgio Valmorbida received the Ph.D. degree in control theory from the Institut National des Sciences Appliquées, Toulouse, France, in 2010 for the research developed at the LAAS-CNRS and the *Habilitation à diriger des Recherches* from Université Paris-Saclay in 2021.

He has held postdoctoral research positions with the Università di Roma "Tor Vergata," Rome, Italy, from 2010 to 2012 and with the Department of Engineering Science, University of Oxford, Oxford, U.K., from 2013 to 2015. He was a Junior Research Fellow at Somerville College, University of Oxford, Oxford, U.K., from 2013 to 2015. He is currently an Associate Professor with the Department d'Automatique, CentraleSupélec, a member of the L2S, and a member of the Inria Saclay DISCO project Gif-sur-Yvette, France. His main research interests include analysis and control of nonlinear systems with input constraints, hybrid systems, infinite-dimensional systems, and polynomial optimization.

Authorized licensed use limited to: UNIVERSITAETSBIBL STUTTGART. Downloaded on September 29,2025 at 08:51:42 UTC from IEEE Xplore. Restrictions apply.