An Najah National University
Faculty of Engineering
Computer Engineering Department
Digital design 2 LAB -10636391-
Experiment 5: LCD Driver
Dr. Sufyan Samara and Dr. Ashraf Armoush

Lab Overview:

In this lab you will design and implement a driver that will be used to handle the parallel communication between the external LCD module and the ZedBoard.
Note: We will provide some info on the LCD, however, you can find further information in the PmodCLP LCD Reference Manual that provides essential information for programming and control of the LCD.

PmodCLP

The Character LCD with Parallel Interface module from ***Digilent*** is a 16×2 character LCD to let the system boards display up to 32 different characters.

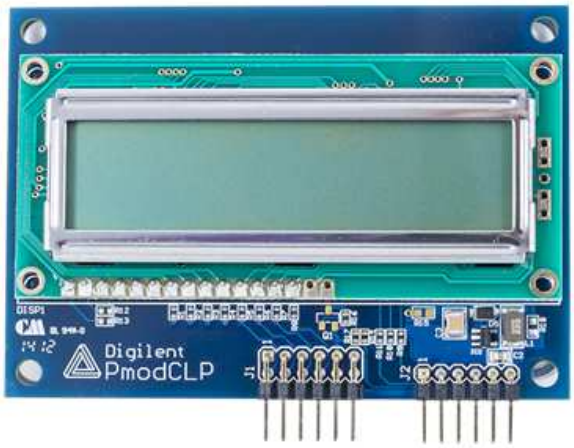

Figure 1

The LCD consists of two lines. Each line can display up to 16 characters. To display a character, first you need to send the location address where you want the character to be displayed. Then the character code of the character to be displayed.
The LCD device has three internal regions of memory. The Data Display RAM (DD RAM), which references the data to be displayed on the screen, the Character Generator RAM (CG RAM), which stores user-defined patterns and the Character Generator ROM (CG ROM), which includes a number of predefined patterns that correspond to ASCII symbols. We will only use the DD-RAM and the CG-ROM. To reference a value in the CG-ROM, the value in the figure 1 needs to be written into the DD-RAM. For example, the character 'S' from the CGROM would have the value "01010011".

These values are written to the location address of the LCD. The address of DD-RAM location is first sent to LCD then the code of the symbol to be displayed. The codes for characters are as follows:

Figure 1: LCD Character Set

The LCD physical locations correspond to addresses in the DD-RAM as follows:

Character Display Addresses

1	00	01	02	03	04	05	06	07	08	09	0A	0B	0C	0D	0E	0F	10	…	27
2	40	41	42	43	44	45	46	47	48	49	4A	4B	4C	4D	4E	4F	50	…	67
	1	**2**	**3**	**4**	**5**	**6**	**7**	**8**	**9**	**10**	**11**	**12**	**13**	**14**	**15**	**16**	**17**	**…**	**40**

Undisplayed Addresses

DD RAM Hexadecimal Addresses (No Display Shifting)

Interfacing with Pmod

The PmodCLP utilizes a Samsung KS0066 LCD controller to display information to a 16x2 LCD panel which has both kinds of interface types: 4-bit bus and 8-bit bus. The PmodCLP module has 8 bits interface as shown in the next figure.

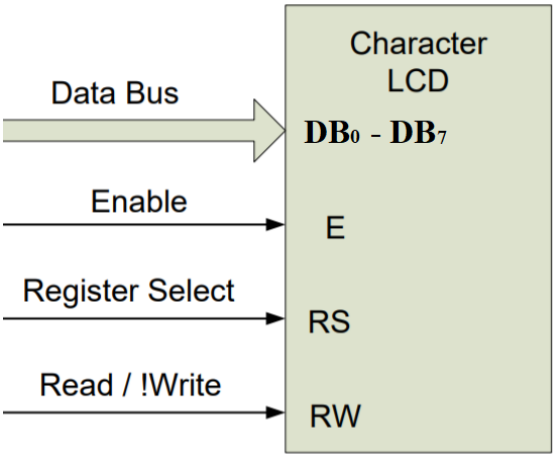

Pmod CLP module should be connected with two Digilent Pmod™ compatible headers (2x6). Therefore, it can be connected to JA and JB connectors from the ZedBoard. The pinout for this module is described in the following table.

Header J1 – Top Half				Header J1 – Bottom Half		
Pin	**Signal**	**Description**		**Pin**	**Signal**	**Description**
1	DB0	Data Bit 0		7	DB4	Data Bit 4
2	DB1	Data Bit 1		8	DB5	Data Bit 5
3	DB2	Data Bit 2		9	DB6	Data Bit 6
4	DB3	Data Bit 3		10	DB7	Data Bit 7
5	GND			11	GND	
6	VCC			12	VCC	

Header J2 – Top Half				Header J2 – Bottom Half		
Pin	**Signal**	**Description**		**Pin**	**Signal**	**Description**
1	**Not used**			7	RS	Register select
2				8	RW	Read/Write
3				9	E	Enable
4				10	NC	Not connected
5				11	GND	
6				12	VCC	

Timing Requirements

The Pmod CLP module communicates with the host board via the GPIO protocol. This particular module requires specific timings in order to program the LCD correctly.

Because the Pmod CLP module has 8 bits interface, any 8-bit data/command can be sent in a single transition. The general timing diagram is shown below.

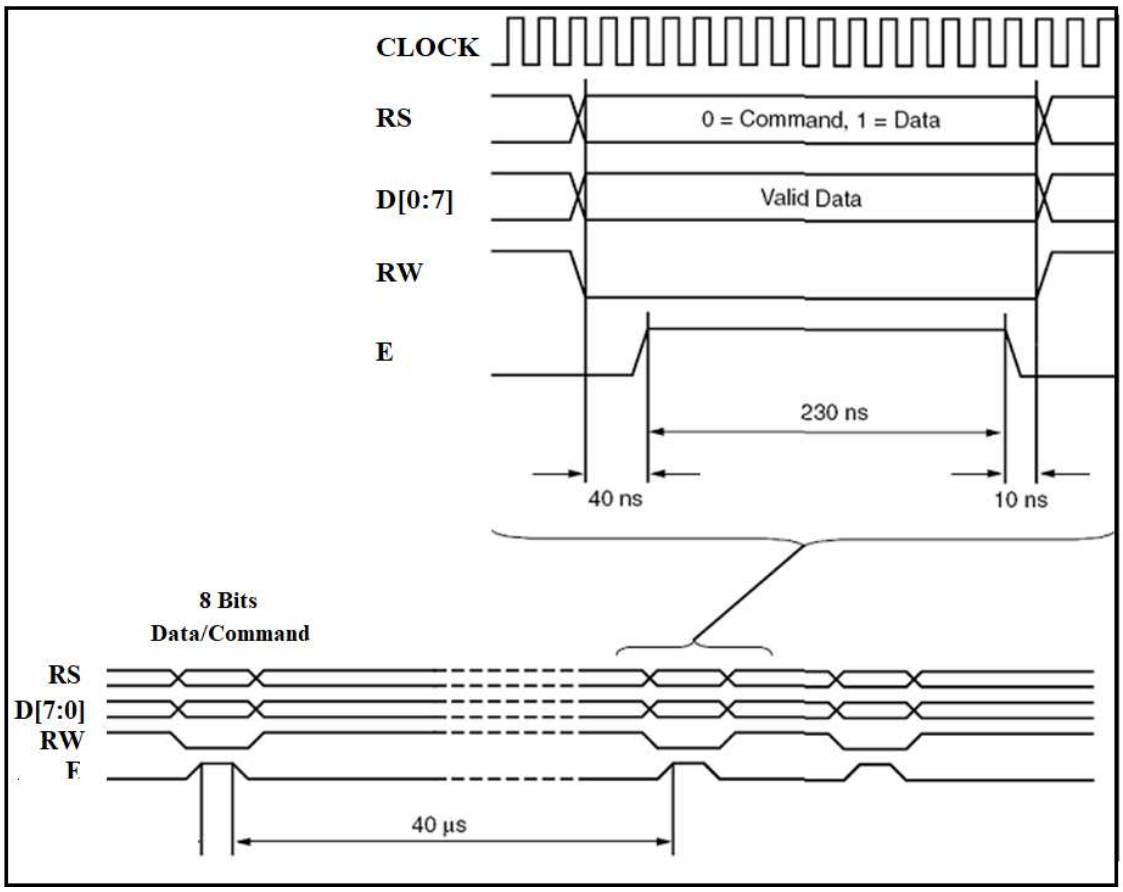

In case of two successive commands, they have to be separated with <u>40 µs delay</u> (4000 clock cycles).

From the above diagram, it is important to notice the following:

- Setup time (time for the outputs to stabilize) is 40ns (4 clock cycles).
- The hold time (time to assert the enable (E) pin) is 230ns (23 clock cycles).
- The fall time (time to allow the outputs to stabilize) is 10ns (1 clock cycle).

You can simplify the process as follows:

1. Select the correct value for RS, RW, and Data bus
2. Set E to 1
3. At least 230ns must elapse. (Use 1 µs : 100 Clock cycles)
4. Set E to 0

The command sets are as follows:

Instruction	**Instruction bit assignments**									
	RS	**R/W**	**DB7**	**DB6**	**DB5**	**DB4**	**DB3**	**DB2**	**DB1**	**DB0**
Clear Display	0	0	0	0	0	0	0	0	0	1
Cursor Home	0	0	0	0	0	0	0	0	1	-
Entry Mode Set	0	0	0	0	0	0	0	1	I/D	SH
Display On/Off Control	0	0	0	0	0	0	1	D	C	B
Cursor or Display shift	0	0	0	0	0	1	S/C	R/L	-	-
Function Set	0	0	0	0	1	DL	N	F	-	-
Set CGRAM Address	0	0	0	1	AC5	AC4	AC3	AC2	AC1	AC0
Set DDRAM Address	0	0	1	AC6	AC5	AC4	AC3	AC2	AC1	AC0
Read busy flag/address	0	1	BF	AC6	AC5	AC4	AC3	AC2	AC1	AC0
Write data to RAM	1	0	D7	D6	D5	D4	D3	D2	D1	D0
Read data from RAM	1	1	D7	D6	D5	D4	D3	D2	D1	D0

***Note#1:** "-" represents a "don't care" bit

***Note#2:** The complete description for main instructions is shown in the Appendix for this experiment.

An Najah National University
Faculty of Engineering
Computer Engineering Department
Digital design 2 LAB -10636391-
Experiment 5: LCD Driver
Dr. Sufyan Samara and Dr. Ashraf Armoush

Lab Procedure:

1. In the Vivado, you will create a new project: LCDDriver
2. Write the code for the LCDDriver which should include three stages
    - Startup
    - LCD Configuration
    - Display

.

Startup

After the power-on, at least 20ms must elapse before starting the configuration process.

1. Wait for 20ms or longer, which is (2,000,000) clock cycles at 100 MHz
2. Set **RS=0 , RW=0,** and **E=0**
3. Proceed to the next stage (Configuration).

Configuration

1. Issue a Function Set command, 0x38, to configure the display for operation on 8-bit data.
2. Wait for 40 µs (4000 clock cycles)
3. Issue an Entry Mode Set command, 0x06, to set the display to automatically increment the address pointer.
4. Wait for 40 µs (4000 clock cycles)
5. Issue a Display On/Off command, 0x0C, to turn the display on and disables the cursor and blinking.
6. Wait for 40 µs (4000 clock cycles)
7. Finally, issue a Clear Display command. Allow at least 1.64 ms (164,000) clock cycles)
   after issuing this command.
   4. The third and last step involves the actual process of writing data to the DD-RAM.

Display

To show a character on the LCD, you have to:

1. Specify the start address with a Set DD-RAM Address command.
2. Display a character with a Write Data command.
   (Note: Do not forget to use 40 µs delay between successive commands)

An Najah National University
Faculty of Engineering
Computer Engineering Department
Digital design 2 LAB -10636391-
Experiment 5: LCD Driver
Dr. Sufyan Samara and Dr. Ashraf Armoush

In this experiment you have to implement 3 parts:

- **Part1:** (5 Points)
  Display your first name on the first line and your last name on second line

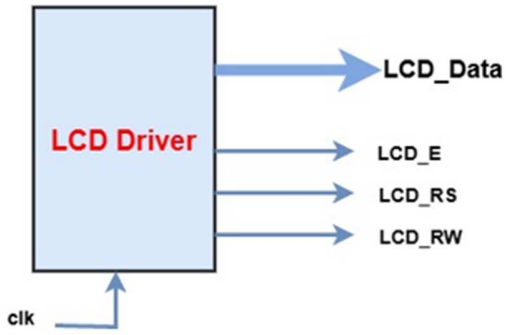

- **Part2:** (10 Points)
  In this part you have to implement a countdown timer that counts the time in backwards and display the amount of time left on the LCD.

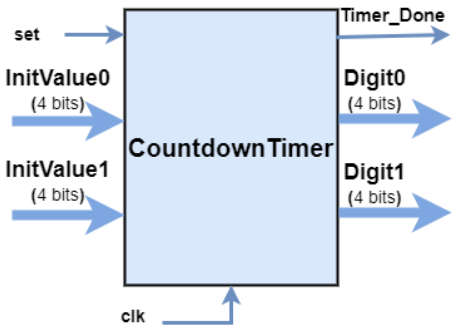

Note: The output of the countdown timer should be displayed in the center of the first line of the LCD, and the word 'DONE' should appear on the second line when the time is done (reaches 00)

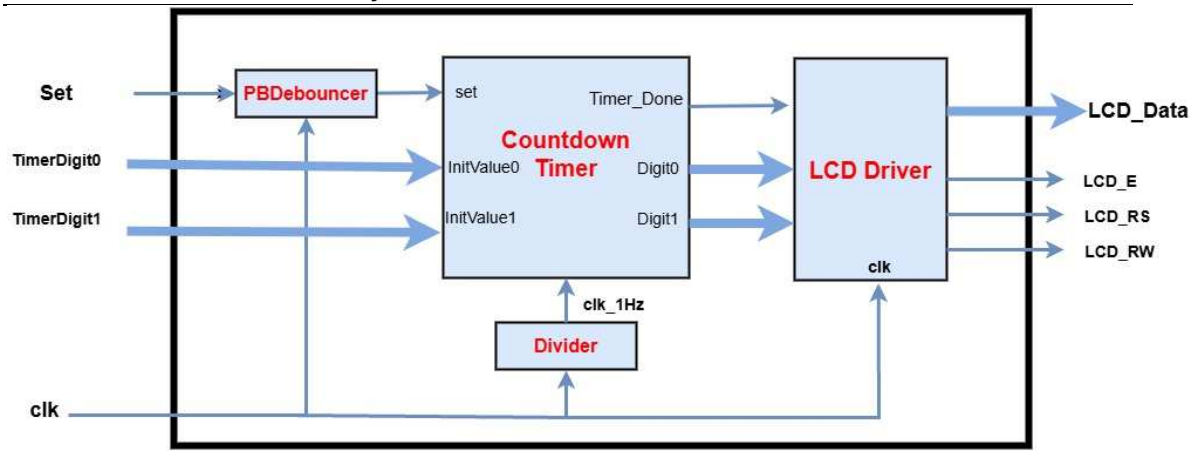

- **<u>Part3:</u>** (5 Points)

  <u>Scrolling text Animation</u>: In this part you have to write a complete code to scroll your name on the LCD from right to left.

Synthesis, Implementation, and Bitstream Generation:

- Add a constraint file to assign the input ports as follows:
  - **clk**: Y9
  - **Set**: Push Button
  - **TimerDigit0** (4bits): SW3, SW2, SW1, and SW0
  - **TimerDigit1** (4bits): SW7, SW6, SW5, and SW4

	Signal Name	Package Pin	I/O Std
Up Button	BTNU	T18	LVCMOS18
Right Button	BTNR	R18	LVCMOS18
Down Button	BTND	R16	LVCMOS18
Center Button	BTNC	P16	LVCMOS18
Left Button	BTNL	N15	LVCMOS18

	Package Pin	I/O Std
clk	Y9	LVCMOS33

Inputs	Package Pin	I/O Std
SW0	F22	LVCMOS18
SW1	G22	LVCMOS18
SW2	H22	LVCMOS18
SW3	F21	LVCMOS18
SW4	H19	LVCMOS18
SW5	H18	LVCMOS18
SW6	H17	LVCMOS18
SW7	M15	LVCMOS18

Note: For Pmod CLP module, you have to use the following pin assignment to be able to connect your module with JA and JB connectors on the ZedBoard.

	Signal Name	Package Pin	I/O Std
DB0	JA1	Y11	LVCMOS33
DB1	JA2	AA11	LVCMOS33
DB2	JA3	Y10	LVCMOS33
DB3	JA4	AA9	LVCMOS33
DB4	JA7	AB11	LVCMOS33
DB5	JA8	AB10	LVCMOS33
DB6	JA9	AB9	LVCMOS33
DB7	JA10	AA8	LVCMOS33
RS	JB7	V12	LVCMOS33
RW	JB8	W10	LVCMOS33
E	JB9	V9	LVCMOS33

Useful Links:

- ZedBoard User's Guide:
  http://zedboard.org/sites/default/files/documentations/ZedBoard_HW_UG_v2_2.pdf
  https://reference.digilentinc.com/_media/reference/pmod/pmodclp/ks0066.pdf

- Pmod CLP Reference Manual
  https://reference.digilentinc.com/reference/pmod/pmodclp/reference-manual

- Programmable Logic Master User Constraints
  https://reference.digilentinc.com/_media/reference/pmod/pmodclp/ks0066.pdf

  http://zedboard.org/sites/default/files/documentations/zedboard_master_XDC_RevC_D_v3.zip
  http://zedboard.org/sites/default/files/documentations/zedboard_master_UCF_RevC_v3.zip

Appendix
(LCD Instructions and Codes)

Function Set

DB7	DB6	DB5	DB4	DB3	DB2	DB1	DB0
0	0	1	DL	N	F	--	--

Sets interface data length (DL), number of display lines (N) and character font (F)

Details

DL: Interface data length control bit

When DL = 1, it means 8-bit bus mode.

When DL = 0, it means 4-bit bus mode.

N: Display line number control bit

When N = 0, 1-line display mode is set.

When N = 1, 2-line display mode is set.

F: Display font type control bit

When F = 0, 5x8 dots format display mode is set.

When F = 1, 5x11 dots format display mode is set.

Entry Mode Set

DB7	DB6	DB5	DB4	DB3	DB2	DB1	DB0
0	0	0	0	0	1	I/D	SH

Set the moving direction of cursor and display.

Details

I/D: Increment / decrement of the DDRAM address counter after subsequent DD RAM

When I/D = 1, cursor/blink moves to right and DDRAM address is increased by 1.

When I/D = 0, cursor/blink moves to left and DDRAM address is decreased by 1.

If **SH** = 1 the display will be shifted to the left (if I/D = 1) or right (if I/D = 0) on subsequent DD RAM write operations. This makes it looks as if the cursor stands still and the display moves when each character is written to the DD RAM. if **SH** = 0 the display will not shift on subsequent DD RAM write operations.

Display ON/OFF

DB7	DB6	DB5	DB4	DB3	DB2	DB1	DB0
0	0	0	0	1	D	C	B

Controls display of characters and cursor

Details

D: The display is ON when D = 1 and OFF when D = 0. The DD RAM contents remain unchanged.

C: The cursor is displayed when C = 1 and is not displayed when C = 0.

B: The character at the cursor position blinks when B = 1.

Clear Display

DB7	DB6	DB5	DB4	DB3	DB2	DB1	DB0
0	0	0	0	0	0	0	1

Clears all display and returns the cursor to the home position (Address 0).

Set DDRAM Address

DB7	DB6	DB5	DB4	DB3	DB2	DB1	DB0
1	AC6	AC5	AC4	AC3	AC2	AC1	AC0

Sets the DD RAM address. Subsequent read or writes refer to the DD RAM.

Details

Sets the specified value (AC6--AC0) into the address counter. Subsequent read or write operations transfer data from, or to, the display RAM.

Write data to CGRAM or DDRAM

DB7	DB6	DB5	DB4	DB3	DB2	DB1	DB0
D7	D6	D5	D4	D3	D2	D1	D0

Writes binary 8-bit data into DD RAM or CG RAM

Details

The selection of RAM from DDRAM, and CGRAM, is set by the previous address set instruction (set DRAM address or set CGRAM address).

After write operation, the address is automatically increased/decreased by 1, according to the entry mode.