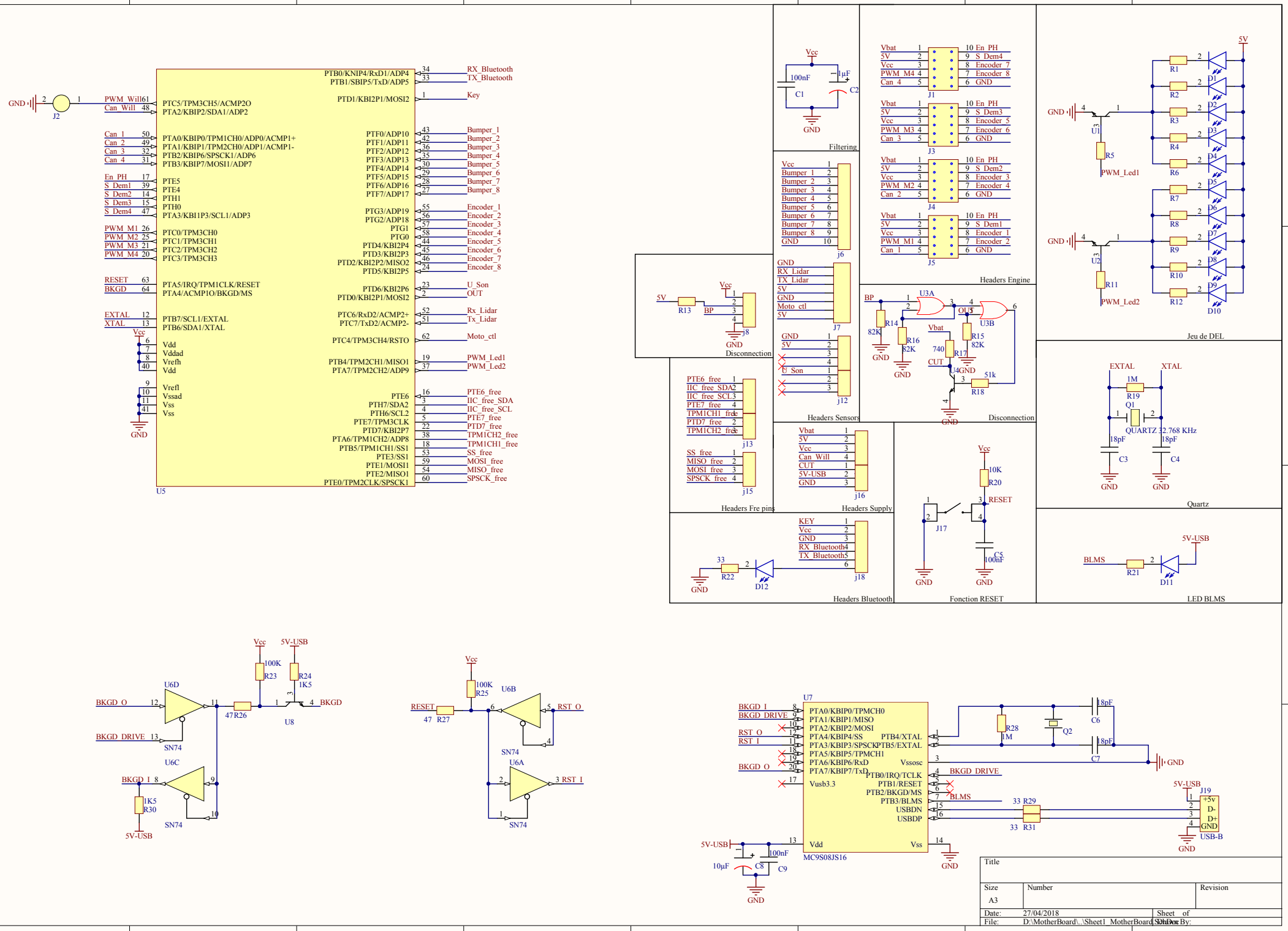
U5
PTB0/KNIP4/RxD1/ADP4
PTB1/SBIP5/TxD/ADP5
PTD1/KBI2P1/MOSI2
PTC5/TPM3CH5/ACMP2O
PTA2/KBIP2/SDA1/ADP2
PTA0/KBIP0/TPM1CH0/ADP0/ACMP1+
PTA1/KBIP1/TPM2CH0/ADP1/ACMP1-
PTB2/KBIP6/SPSCK1/ADP6
PTB3/KBIP7/MOSI1/ADP7
PTE5
PTE4
PTH1
PTH0
PTA3/KBI1P3/SCL1/ADP3
PTC0/TPM3CH0
PTC1/TPM3CH1
PTC2/TPM3CH2
PTC3/TPM3CH3
PTA5/IRQ/TPM1CLK/RESET
PTA4/ACMP1O/BKGD/MS
PTB7/SCL1/EXTAL
PTB6/SDA1/XTAL
Vdd
Vddad
Vrefh
Vdd
Vrefl
Vssad
Vss
Vss
PTF0/ADP10
PTF1/ADP11
PTF2/ADP12
PTF3/ADP13
PTF4/ADP14
PTF5/ADP15
PTF6/ADP16
PTF7/ADP17
PTG3/ADP19
PTG2/ADP18
PTG1
PTG0
PTD4/KBI2P4
PTD3/KBI2P3
PTD2/KBI2P2/MISO2
PTD5/KBI2P5
PTD6/KBI2P6
PTD0/KBI2P1/MOSI2
PTC6/RxD2/ACMP2+
PTC7/TxD2/ACMP2-
PTC4/TPM3CH4/RSTO
PTB4/TPM2CH1/MISO1
PTA7/TPM2CH2/ADP9
PTE6
PTH7/SDA2
PTH6/SCL2
PTE7/TPM3CLK
PTD7/KBI2P7
PTA6/TPM1CH2/ADP8
PTB5/TPM1CH1/SS1
PTE3/SS1
PTE1/MOSI1
PTE2/MISO1
PTE0/TPM2CLK/SPSCK1
RX_Bluetooth
TX_Bluetooth
Key
Bumper_1
Bumper_2
Bumper_3
Bumper_4
Bumper_5
Bumper_6
Bumper_7
Bumper_8
Encoder_1
Encoder_2
Encoder_3
Encoder_4
Encoder_5
Encoder_6
Encoder_7
Encoder_8
U_Son
OUT
Rx_Lidar
Tx_Lidar
Moto_ctl
PWM_Led1
PWM_Led2
PTE6_free
IIC_free_SDA
IIC_free_SCL
PTE7_free
PTD7_free
TPM1CH2_free
TPM1CH1_free
SS_free
MOSI_free
MISO_free
SPSCK_free
GND
J2
PWM_Will
Can_Will
Can_1
Can_2
Can_3
Can_4
En_PH
S_Dem1
S_Dem2
S_Dem3
S_Dem4
PWM_M1
PWM_M2
PWM_M3
PWM_M4
RESET
BKGD
EXTAL
XTAL
Vcc
Filtering
100nF
C1
1µF
C2
J1
J3
J4
J5
Headers Engine
Vbat
5V
PWM_M4
PWM_M3
PWM_M2
PWM_M1
J6
J7
J12
Headers Sensors
Bumper_1
Bumper_2
Bumper_3
Bumper_4
Bumper_5
Bumper_6
Bumper_7
Bumper_8
RX_Lidar
TX_Lidar
Moto_ctl
R13
BP
j8
Disconnection
U3A
U3B
R14
82K
R16
82K
R15
82K
R17
740
R18
51k
CUT
OUT
j13
j15
Headers Fre pins
j16
Headers Supply
5V-USB
CUT
j18
Headers Bluetooth
R22
33
D12
R20
10K
RESET
J17
C5
100nF
Fonction RESET
R1
R2
R3
R4
R5
R6
R7
R8
R9
R10
R11
R12
D1
D2
D3
D4
D5
D6
D7
D8
D9
D10
U1
U2
Jeu de DEL
R19
1M
Q1
QUARTZ 32.768 KHz
18pF
C3
C4
Quartz
R21
D11
LED BLMS
U6D
U6C
U6B
U6A
U8
SN74
R23
100K
R24
1K5
R26
47
R30
1K5
R25
100K
R27
47
RST_O
RST_I
U7
MC9S08JS16
PTA0/KBIP0/TPMCH0
PTA1/KBIP1/MISO
PTA2/KBIP2/MOSI
PTA4/KBIP4/SS
PTA3/KBIP3/SPSCK
PTA5/KBIP5/TPMCH1
PTA6/KBIP6/RxD
PTA7/KBIP7/TxD
Vusb3.3
PTB4/XTAL
PTB5/EXTAL
Vssosc
PTB0/IRQ/TCLK
PTB1/RESET
PTB2/BKGD/MS
PTB3/BLMS
USBDN
USBDP
Vdd
Vss
BKGD_DRIVE
BLMS
R28
1M
Q2
C6
C7
R29
33
R31
33
J19
+5V
D-
D+
GND
USB-B
C8
10µF
C9
100nF
Title
Size
A3
Number
Revision
Date:
27/04/2018
Sheet of
File:
D:\MotherBoard\..\Sheet1_MotherBoard.SchDoc
Drawn By: