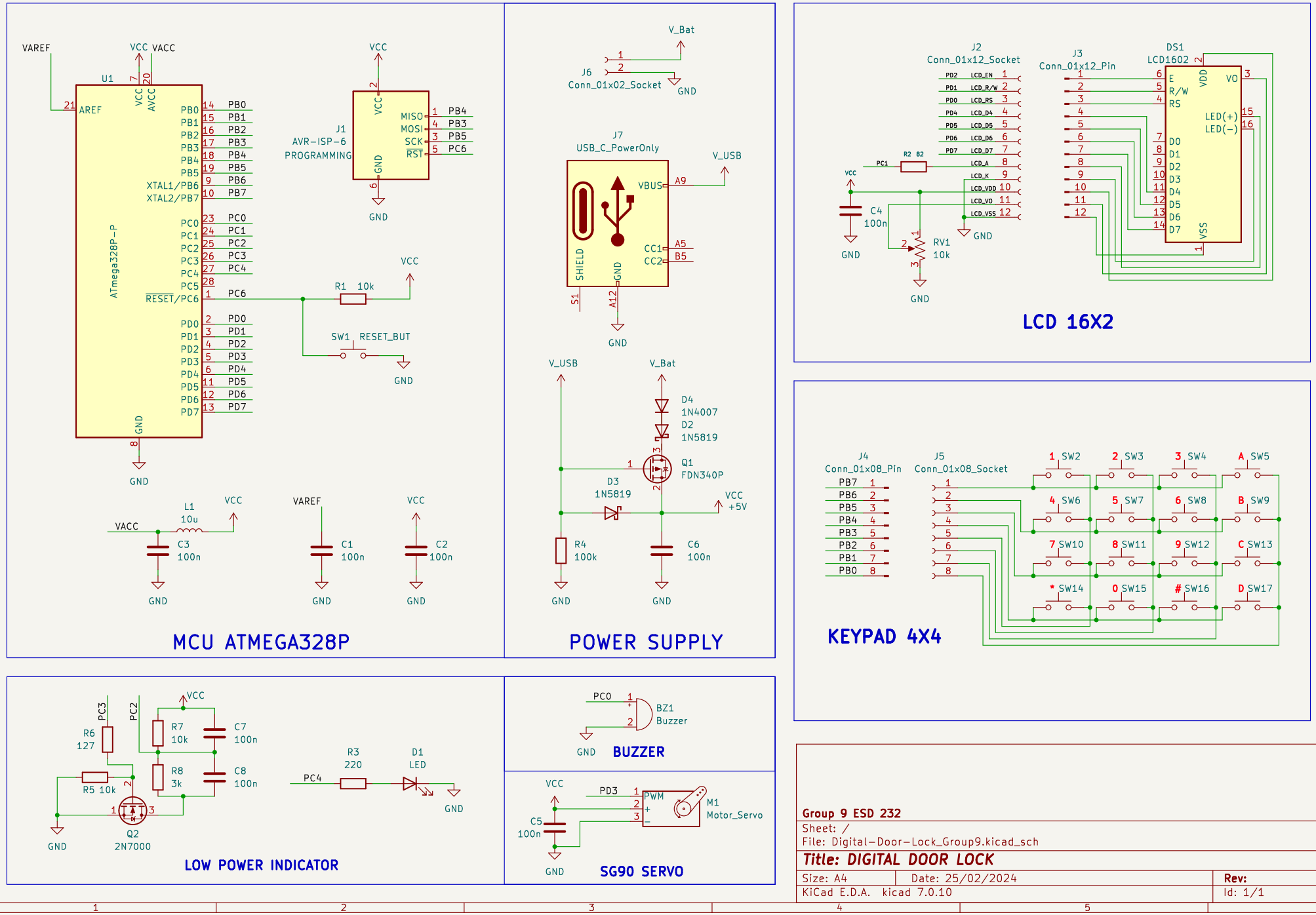
MCU ATMEGA328P
U1
ATmega328P-P
VAREF
VCC VACC
AREF
PB0 PB1 PB2 PB3 PB4 PB5 PB6 PB7
XTAL1/PB6
XTAL2/PB7
PC0 PC1 PC2 PC3 PC4 PC5
RESET/PC6
PD0 PD1 PD2 PD3 PD4 PD5 PD6 PD7
GND
J1
AVR-ISP-6
PROGRAMMING
MISO MOSI SCK RST
R1 10k
SW1 RESET_BUT
L1
10u
VACC
C3
100n
C1
100n
C2
100n
POWER SUPPLY
V_Bat
J6
Conn_01x02_Socket
J7
USB_C_PowerOnly
V_USB
VBUS
A9
CC1
CC2
A5
B5
SHIELD
S1
A12
D4
1N4007
D2
1N5819
Q1
FDN340P
D3
1N5819
VCC
+5V
R4
100k
C6
100n
LCD 16X2
J2
Conn_01x12_Socket
J3
Conn_01x12_Pin
DS1
LCD1602
PD2 LCD_EN
PD1 LCD_R/W
PD0 LCD_RS
PD4 LCD_D4
PD5 LCD_D5
PD6 LCD_D6
PD7 LCD_D7
LCD_A
LCD_K
LCD_VDD
LCD_VO
LCD_VSS
PC1
R2 B2
C4
100n
RV1
10k
E
R/W
RS
VDD
VO
LED(+)
LED(-)
D0 D1 D2 D3 D4 D5 D6 D7
VSS
KEYPAD 4X4
J4
Conn_01x08_Pin
PB7 PB6 PB5 PB4 PB3 PB2 PB1 PB0
J5
Conn_01x08_Socket
1 SW2
2 SW3
3 SW4
A SW5
4 SW6
5 SW7
6 SW8
B SW9
7 SW10
8 SW11
9 SW12
C SW13
* SW14
0 SW15
SW16
D SW17
LOW POWER INDICATOR
PC3
PC2
R6
127
R5 10k
R7
10k
R8
3k
C7
100n
C8
100n
Q2
2N7000
R3
220
D1
LED
PC4
BUZZER
PC0
BZ1
Buzzer
SG90 SERVO
PD3
PWM
M1
Motor_Servo
C5
100n
Group 9 ESD 232
Sheet: /
File: Digital-Door-Lock_Group9.kicad_sch
Title: DIGITAL DOOR LOCK
Size: A4
Date: 25/02/2024
Rev:
KiCad E.D.A. kicad 7.0.10
Id: 1/1