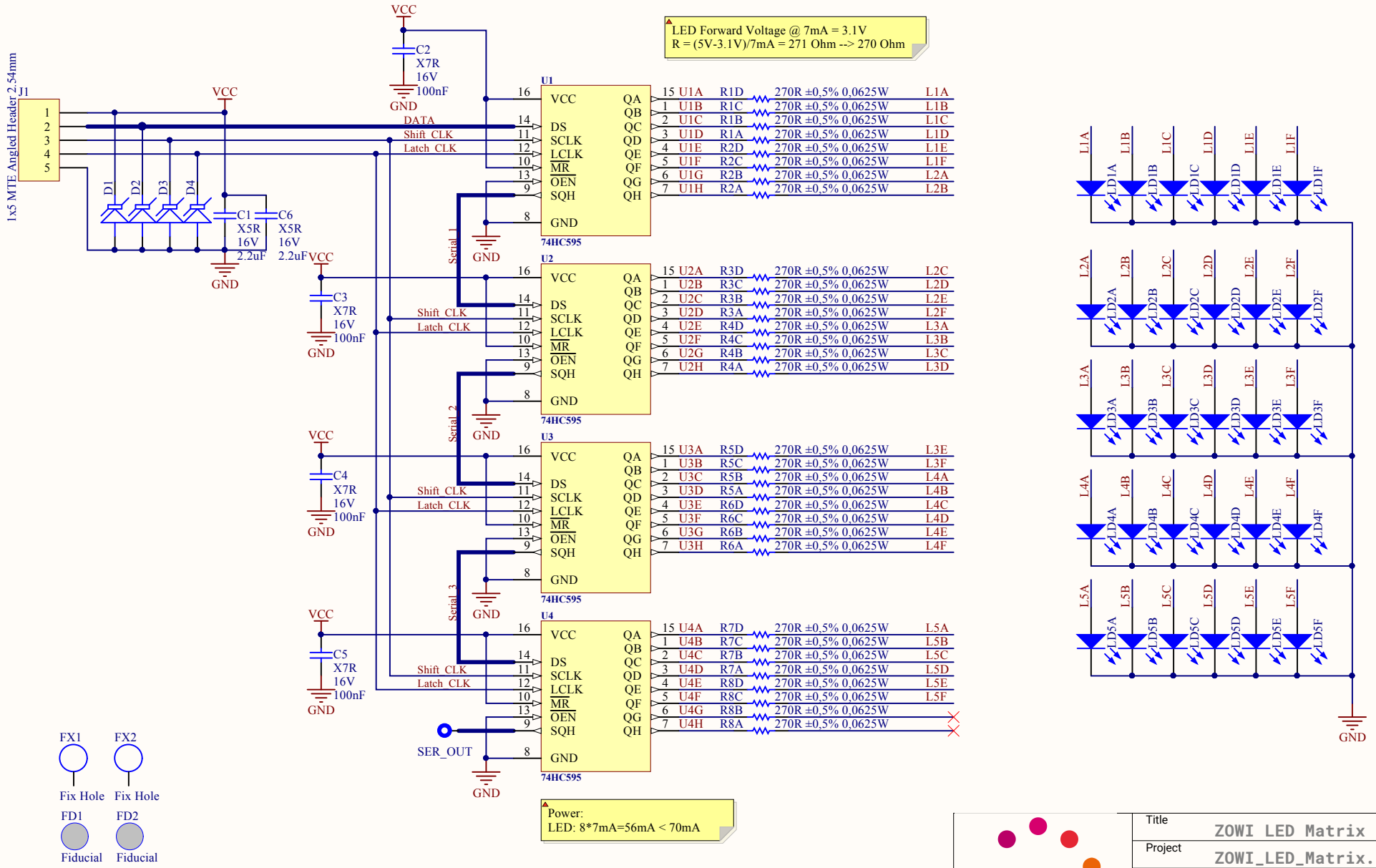

Mundo Reader, S.L. This project and all the sheets and layouts enclosed are licensed under Creative Commons by Attribution and Share Alike [CC BY-SA] (www.creativecommons.com)

Title	ZOWI LED Matrix	
Project	ZOWI_LED_Matrix.PrjPcb	
Author	Jon Goitia	
Size: A4	Number: 1	Revision: 0
Date: 16/11/2015	Time: 12:45:05	Sheet 1 of 1

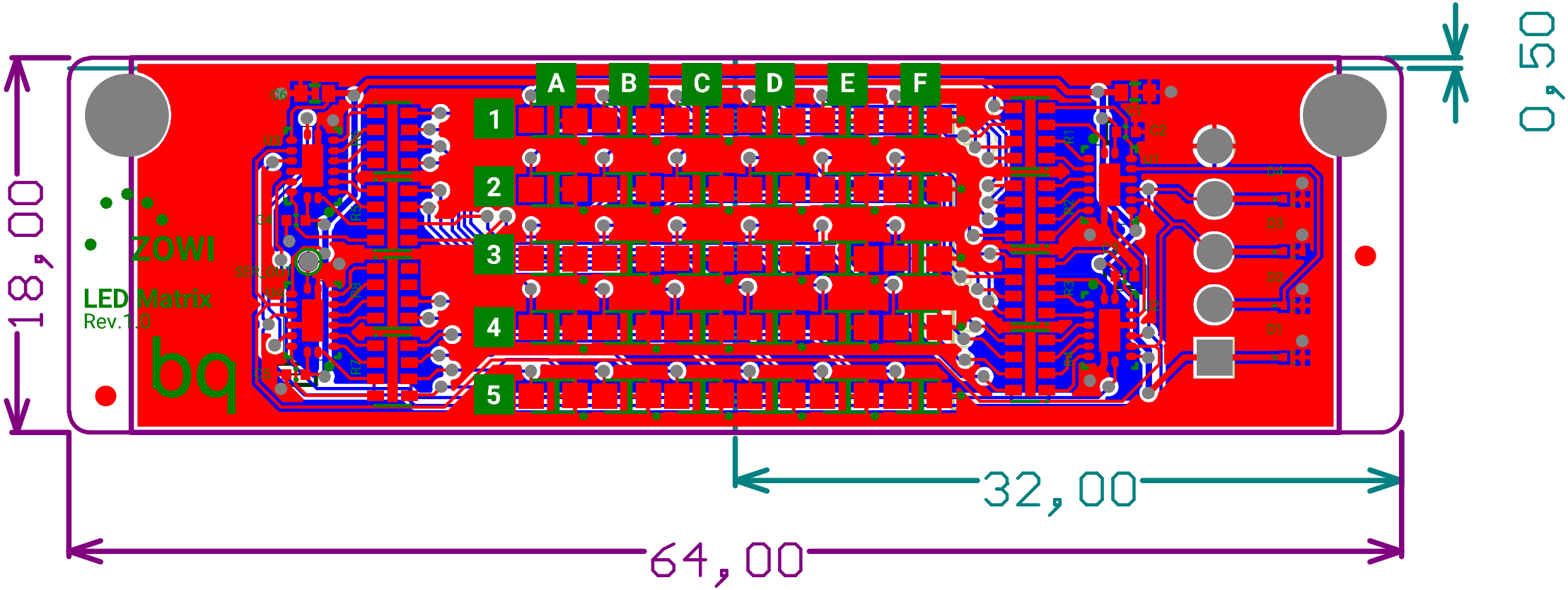
A
B
C
D
E
F
1
2
3
4
5
ZOWI
LED Matrix
Rev.1.0
bq
18,00
32,00
64,00
0,50

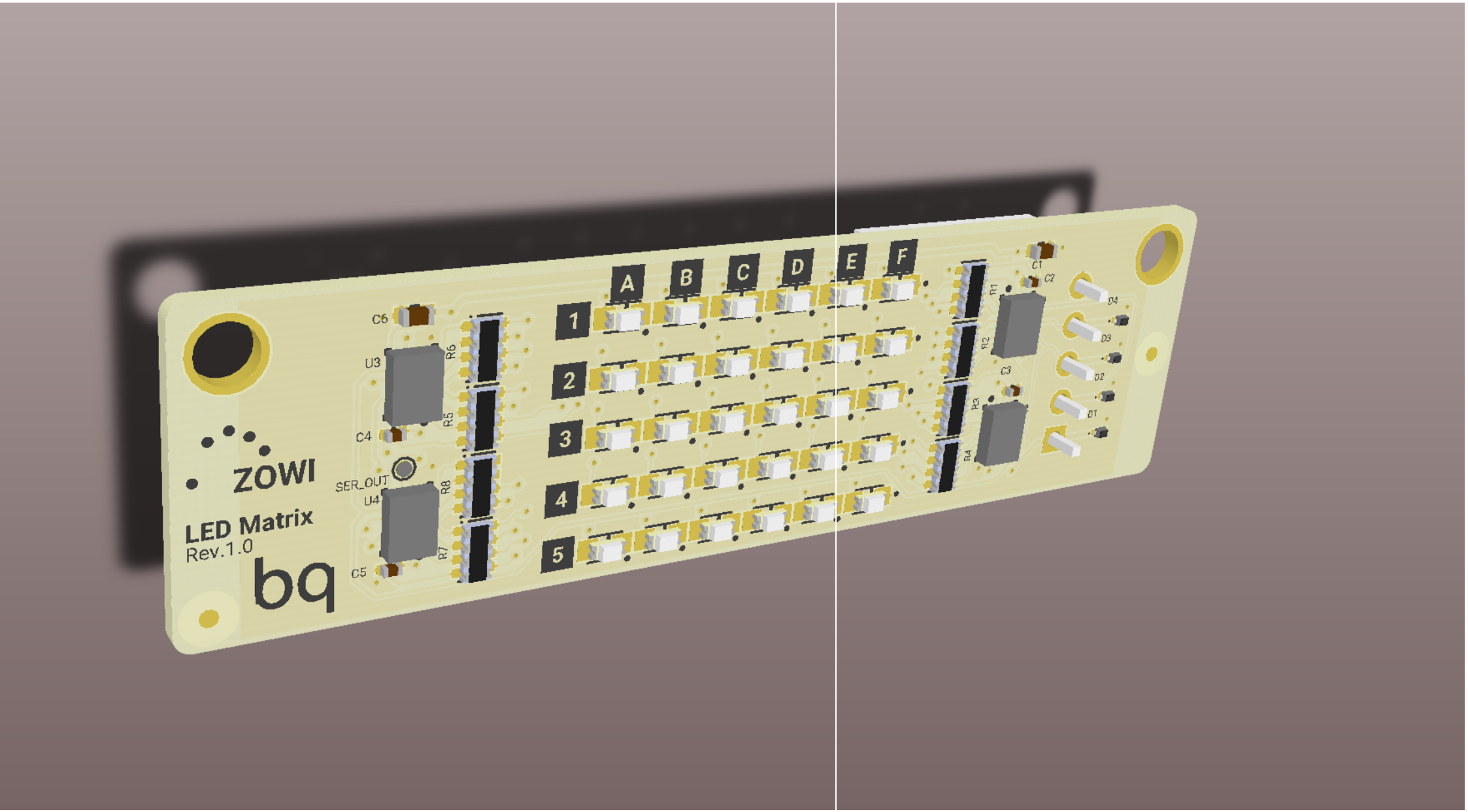
ZOWI
LED Matrix
Rev.1.0
bq
SER_OUT
U3
U4
C4
C5
C6
R5
R6
R7
R8
A
B
C
D
E
F
1
2
3
4
5
R1
R2
R3
R4
C1
C2
C3
D1
D2
D3
D4