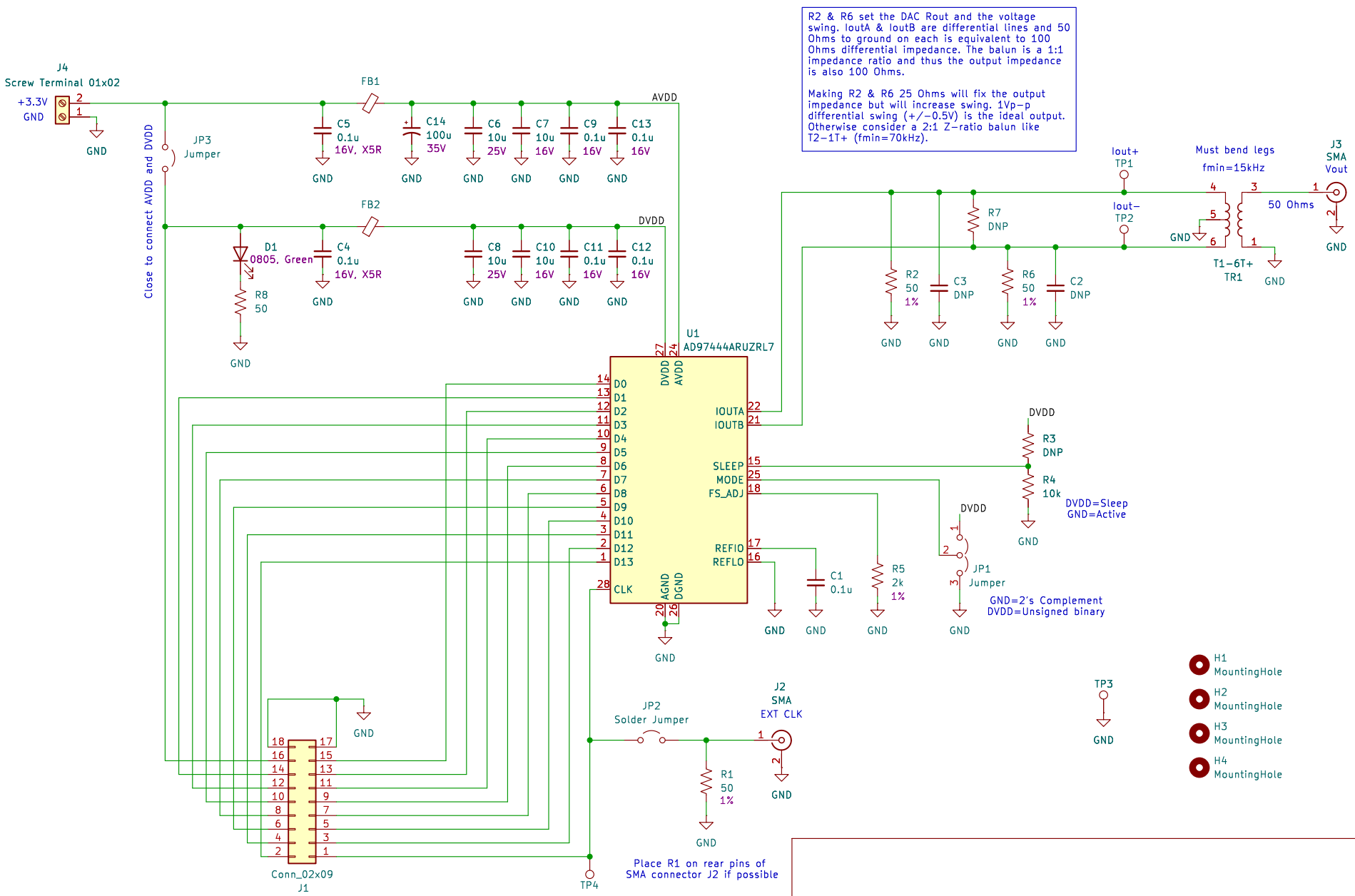


Sheet: /
File: AD9744 Ersatz Eval Board Rev. A.kicad_sch

**Title: AD9744 Ersatz Eval Board**

| | | |
|---|---|---|
| Size: USLetter | Date: 2024-12-31 | Rev: A |
| KiCad E.D.A. 8.0.6 | | Id: 1/1 |