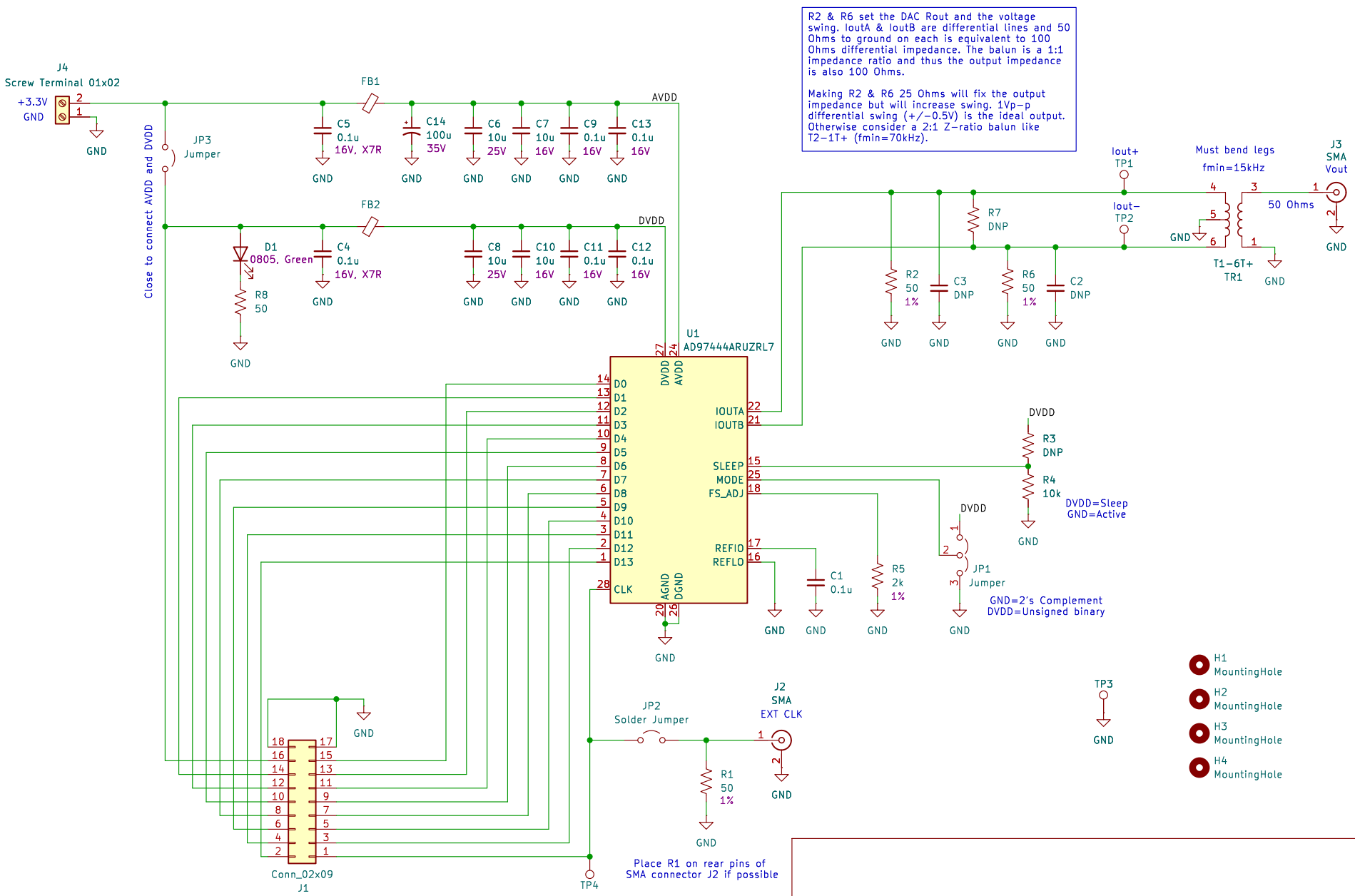

Sheet: /
File: AD9744 Ersatz Eval Board Rev. A.kicad_sch

Title: AD9744 Ersatz Eval Board

Size: USLetter	Date: 2024-12-31	Rev: A
KiCad E.D.A. 8.0.6		Id: 1/1