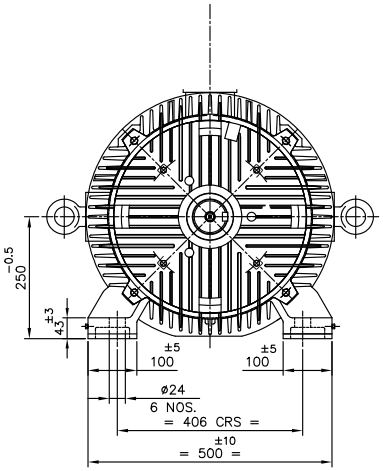

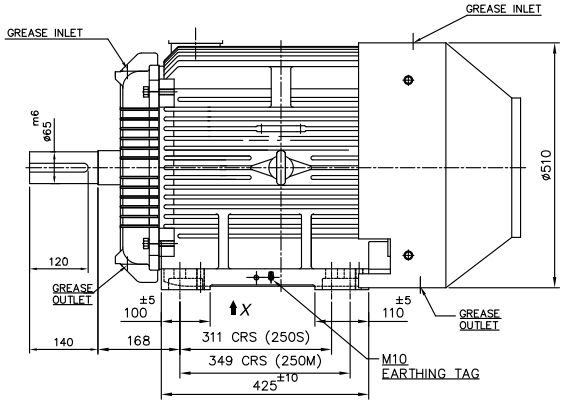

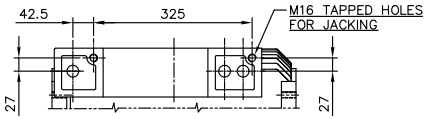

VIEW FROM X

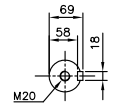

SHAFT END DETAILS

SPECIFICATION:-

RATING (KW/HP)	
POLE	6
BEARING DE SIDE	6214 C3
BEARING NDE SIDE	

MATERIAL OF CONSTRUCTION:-

FRAME	CAST IRON
END COVER (DE)	CAST IRON
END COVER (NDE)	CAST IRON
T. BOX	CAST IRON/M.S
T. BOX COVER	CAST IRON/M.S
SHAFT	CARBON STEEL

UNMENTIONED TOLERANCES ARE AS PER IS-2102-1/ ISO 2768-1	LINEAR DIMNS.	OVER & UPTO	0.5-3	3-6	6-30	30-120	120-400	400-1000	1000-2000
		TOLERANCE	±0.2	±0.3	±0.5	±0.8	±1.2	±2	±3
	ANGULAR DIMNS.	PERMISSIBLE DEVIATIONS FOR LENGTHS OF THE SHORTER SIDE OF THE ANGLE.							
		OVER & UPTO	0-10	10-50	50-120	120-400	400.....		
		TOLERANCE	±1°	±0°30'	±0°20'	±0°10'	±0°5'		

TITLE

GENERAL ARRANGEMENT DRAWING FOR 250M FRAME FOOT MOUNTED (B3) MOTOR

Laxmi Hydraulics Pvt.Ltd. SOLAPUR
Website : www.lhp.co.in

UNLESS OTHERWISE SPECIFIED ALL DIMNS. ARE IN MM. DO NOT SCALE THE DRAWING.

	NAME.	DATE.
DGN.		
DRN.	CHETAN	03.11.24
CHD.		03.11.24
APPD.		03.11.24

SCALE :--1:1
SHEET NO. :-01/02
DRG. NO.
ISSUE NO. 01 REV.NO. 00

REV. NO.	DETAILS OF CHANGE	DATE.	INTL
1			

C:\Users\R&D\Desktop\PROJECT C\BASE.dwg