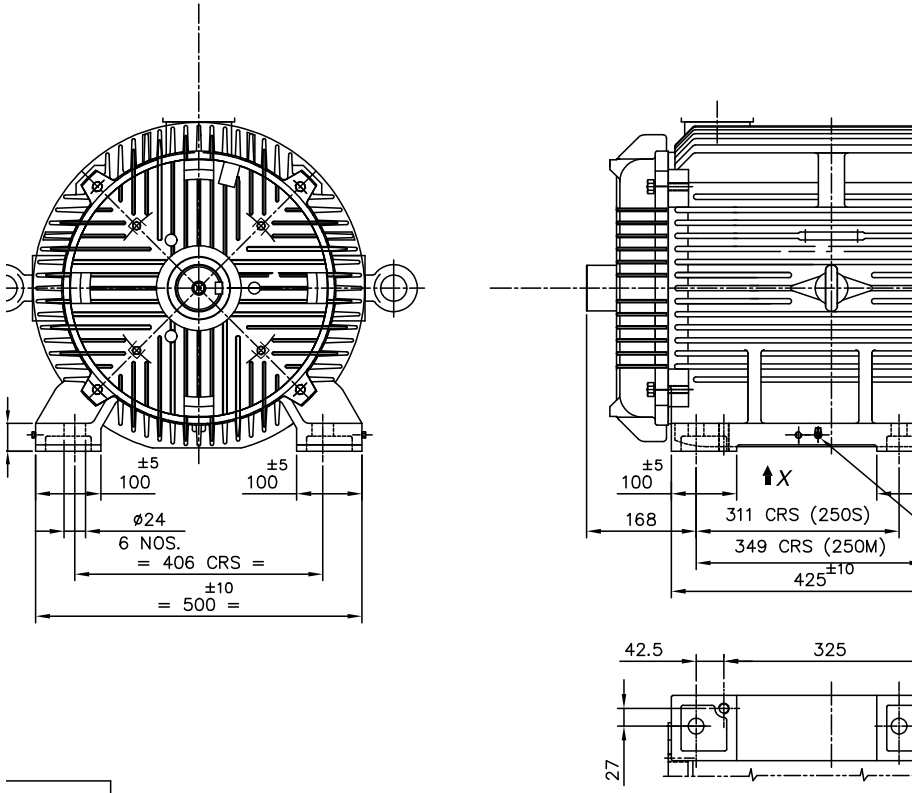

STRUCTION:-

T IRON
T IRON
T IRON
T IRON/M.S
T IRON/M.S
BON STEEL

UNMENTIONED TOLERANCES ARE AS PER IS:2102-1/ ISO 2768-1	LINEAR DIMNS.	OVER & UPTO	0
		TOLERANCE	±
	ANGULAR DIMNS.	PERMISSIBLE	
		OVER & UPTO	
		TOLERANCE	

TITLE

GENERAL AR
250M FRAME

REV. NO.	DETAILS OF CHANGE	DATE.	INTL.
1			

Laxmi Hy
Websi
UNLESS OTHERWISE SP