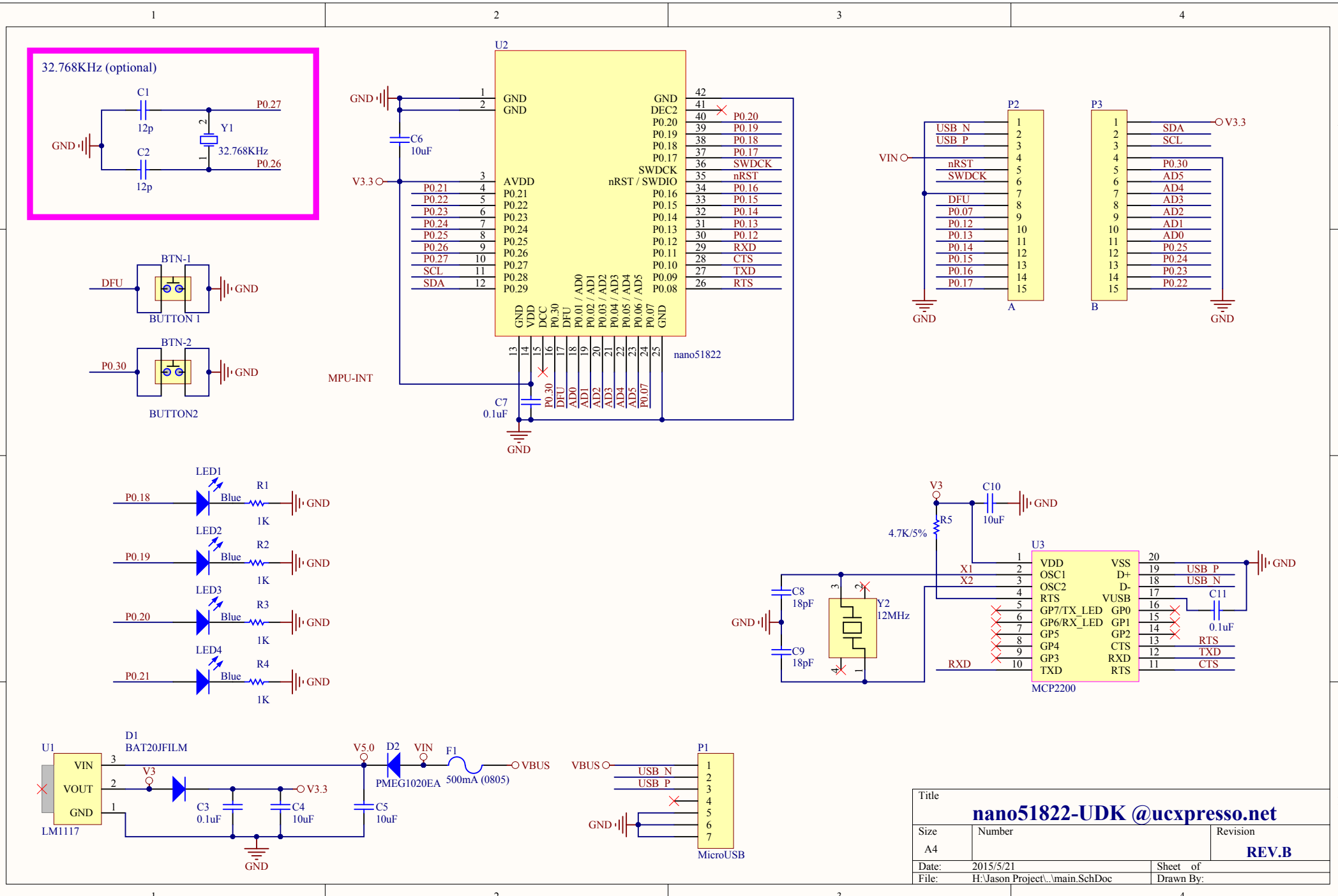
32.768KHz (optional)
C1
12p
C2
12p
Y1
32.768KHz
P0.27
P0.26
GND
U2
nano51822
C6
10uF
C7
0.1uF
V3.3
MPU-INT
P2
P3
VIN
USB_N
USB_P
nRST
SWDCK
DFU
P0.07
P0.12
P0.13
P0.14
P0.15
P0.16
P0.17
SDA
SCL
P0.30
AD5
AD4
AD3
AD2
AD1
AD0
P0.25
P0.24
P0.23
P0.22
BTN-1
BUTTON 1
BTN-2
BUTTON2
LED1
LED2
LED3
LED4
Blue
R1
R2
R3
R4
1K
P0.18
P0.19
P0.20
P0.21
V3
C10
10uF
R5
4.7K/5%
U3
MCP2200
VDD
OSC1
OSC2
RTS
GP7/TX_LED
GP6/RX_LED
GP5
GP4
GP3
TXD
VSS
D+
D-
VUSB
GP0
GP1
GP2
CTS
RXD
X1
X2
C8
18pF
C9
18pF
Y2
12MHz
C11
0.1uF
RTS
TXD
CTS
RXD
U1
LM1117
VIN
VOUT
D1
BAT20JFILM
C3
0.1uF
C4
10uF
C5
10uF
V5.0
D2
PMEG1020EA
F1
500mA (0805)
VBUS
P1
MicroUSB
Title
nano51822-UDK @ucxpresso.net
Size
A4
Number
Revision
REV.B
Date:
2015/5/21
Sheet of
File:
H:\Jason Project\..\main.SchDoc
Drawn By: