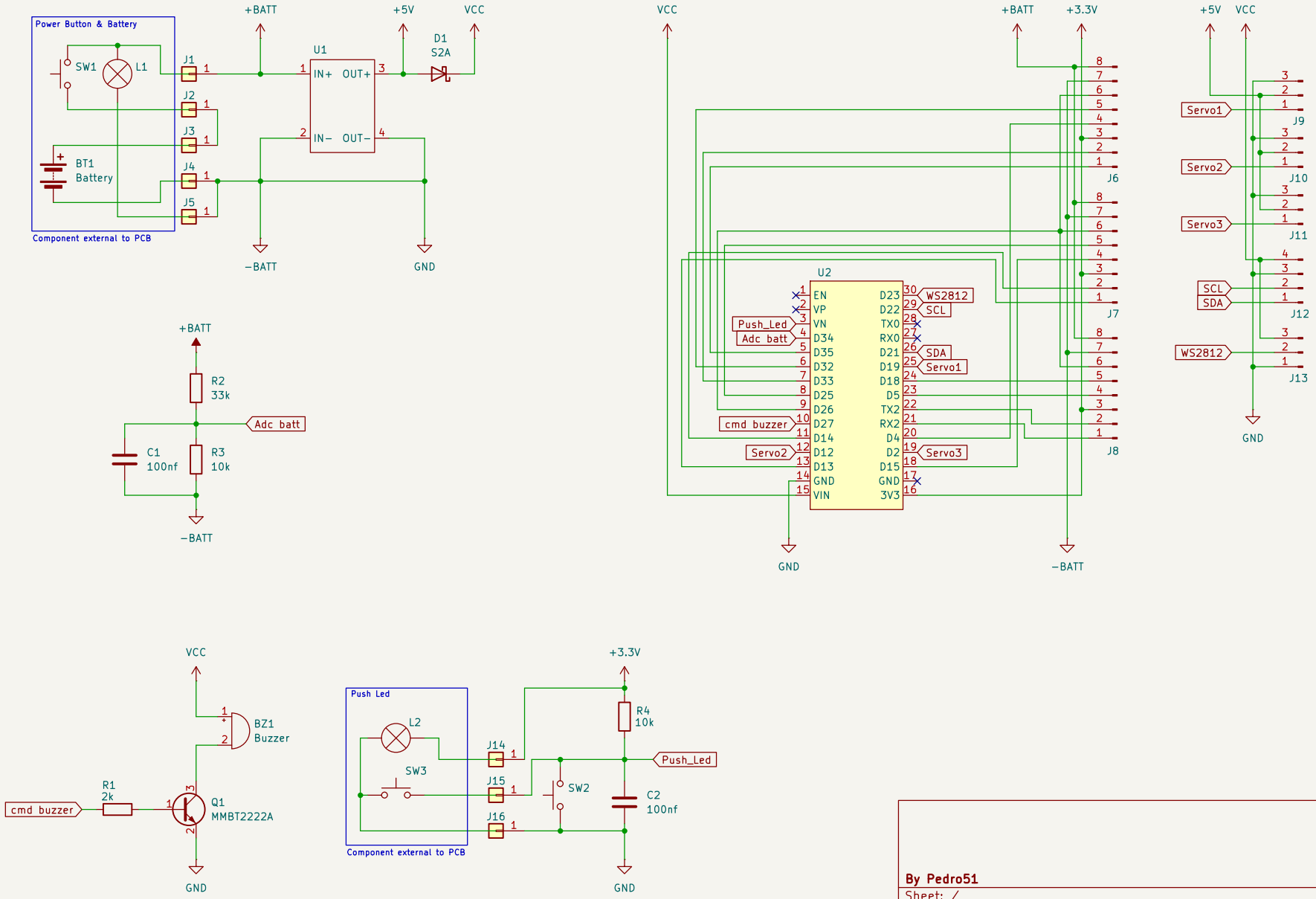

By Pedro51

Sheet: /

File: Self balancing cube.kicad_sch

Title: Self Balancing Cube

Size: A4	Date: 2024-09-04	Rev: 1.1
KiCad E.D.A. 8.0.4		Id: 1/1