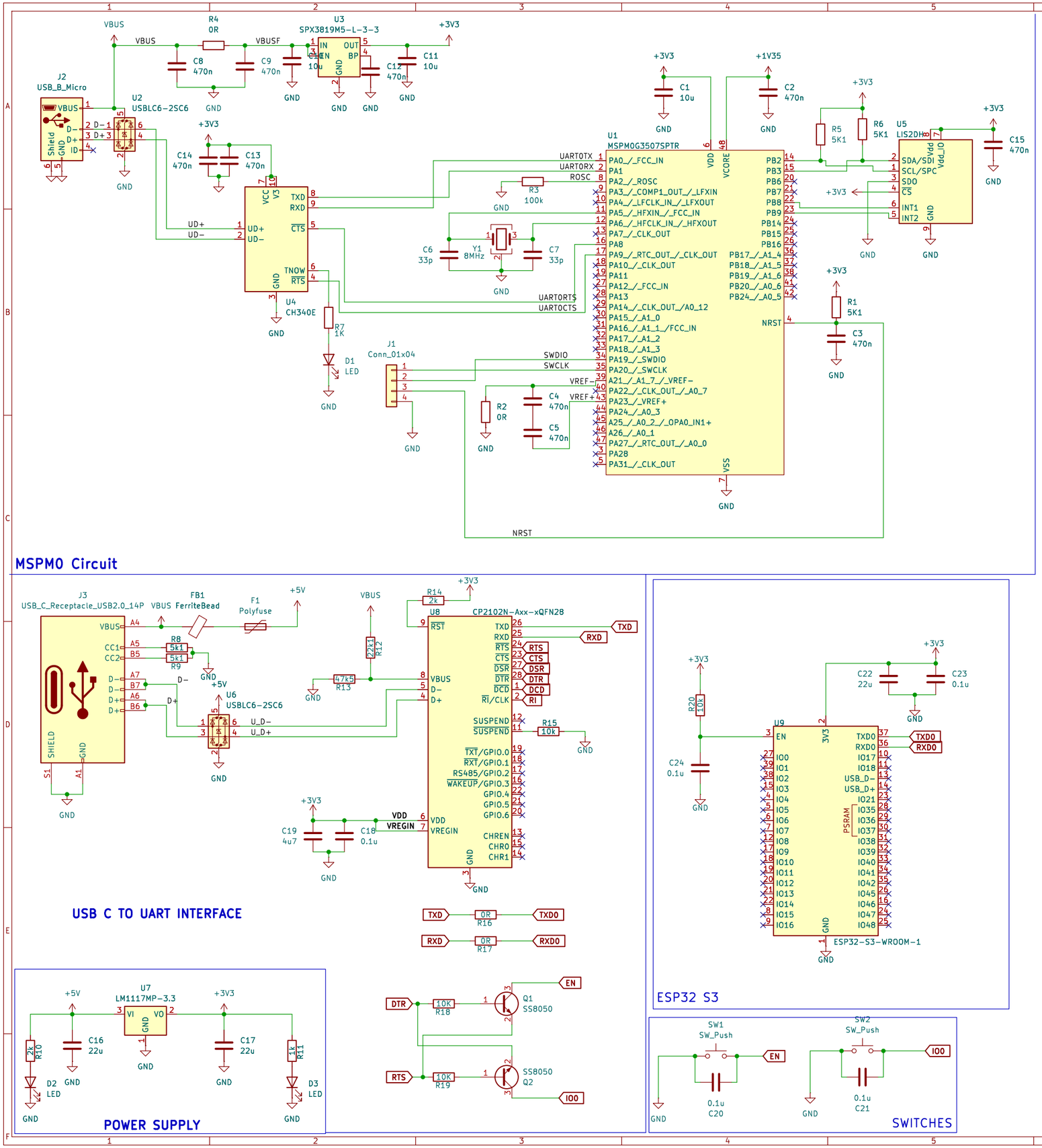
MSPM0 Circuit
J2
USB_B_Micro
U2
USBLC6-2SC6
U3
SPX3819M5-L-3-3
U4
CH340E
U1
MSPM0G3507SPTR
U5
LIS2DH
J1
Conn_01x04
D1
LED
Y1
8MHz
J3
USB_C_Receptacle_USB2.0_14P
FB1
FerriteBead
F1
Polyfuse
U6
USBLC6-2SC6
U8
CP2102N-Axx-xQFN28
USB C TO UART INTERFACE
U9
ESP32-S3-WROOM-1
ESP32 S3
U7
LM1117MP-3.3
D2
LED
D3
LED
POWER SUPPLY
Q1
SS8050
Q2
SS8050
SW1
SW_Push
SW2
SW_Push
SWITCHES
Sheet: /
File: Phil_Lab_Demo.kicad_sch
Title: MCU
Size: A3
Date: 2026-03-23
Rev: V1.1
KiCad E.D.A. 9.0.8
Id: 1/1