Beyond scaling laws for fuel-burning propulsion

- *pyCycle* is a gas-turbine cycle analysis tool that enforces mass, energy, and momentum conservation across engine components.
- Engine components are modeled explicitly (fan, compressors, turbines, burner, afterburner, ducts, nozzles) using prescribed pressure ratios, efficiencies, losses, and performance maps.
- On-design analysis sizes the engine; off-design analysis predicts performance across Mach, altitude, and throttle.
- Compared to first-order scaling laws, pyCycle adds realistic losses, choking, and spool interactions

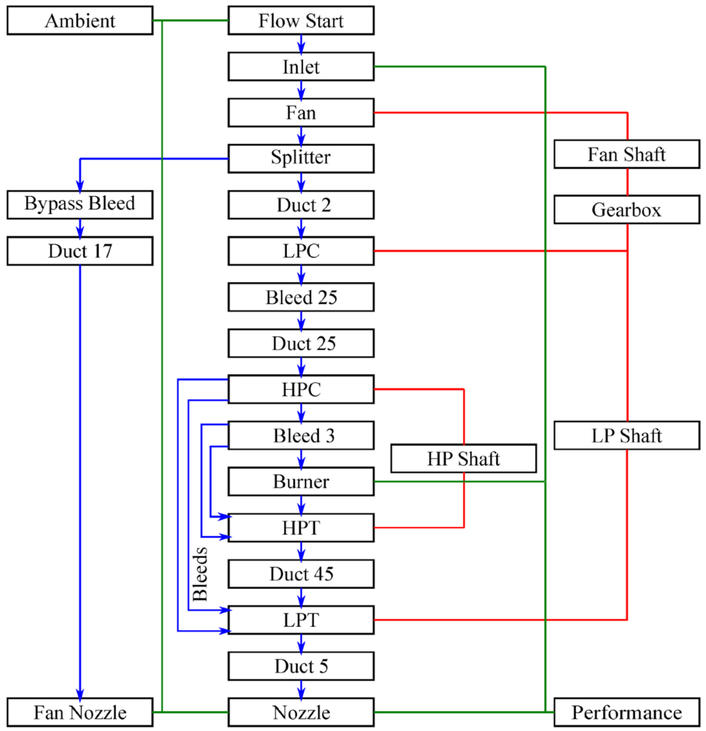

Hendricks, E. S., & Gray, J. S. (2019).
pyCycle: A tool for efficient optimization of gas turbine engine cycles.
Aerospace, *6*(8), 87.

Electric propulsion

- No emissions; more than 90% energy efficiency possible versus only 20% for gas engines
- Fewer moving parts than reciprocating or turbine engines, so greater reliability & simplicity
- Smooth and quiet
- Power does not decrease with altitude
- Can be overpowered for a short time for takeoff or emergency conditions

Batteries:

- Close to 100% charge and discharge efficiency
- Current battery energy density (specific energy): ~150 Wh/kg
- Current battery power density (specific power): ~200 W/kg
- Typically limit discharge to 20% state of charge (SOC) to protect battery life

Propellers

Diameter D or radius R

Pitch / twist β (radial profile)

Chord c (radial distribution)

Angular speed ω [rad/s]

Rotational speed n [rev/s]

Inflow velocity V_∞

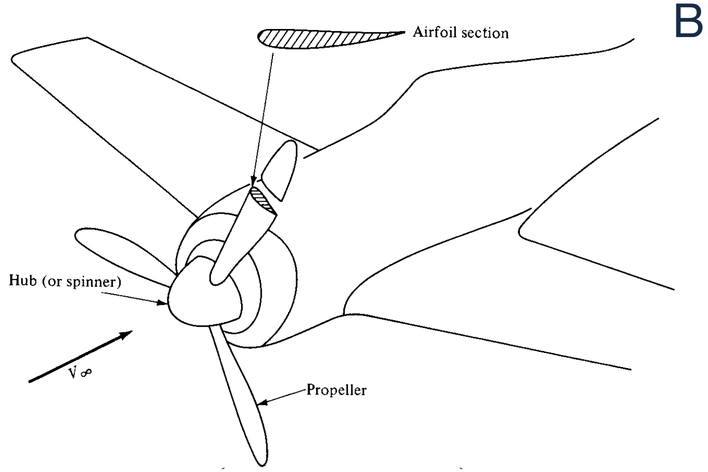

Number of blades B

Blade solidity $\sigma = \dfrac{Bc}{2\pi R}$

Advance ratio $J = \dfrac{V}{nD}$

Disk area $S = \pi R^2$

Disk loading T/S

Blade loading coefficient C_T/σ

Thrust T or thrust coefficient $C_T = \dfrac{T}{\rho n^2 D^4}$

Torque Q or torque coefficient $C_Q = \dfrac{Q}{\rho n^2 D^5}$

Power P or power coefficient $C_P = \dfrac{P}{\rho n^3 D^5}$

Efficiency $\eta = \dfrac{TV_\infty}{Q\omega}$

Figure of merit $FOM = \dfrac{T}{P}\sqrt{\dfrac{T}{2\pi R^2 \rho}}$

Anderson, John David. Introduction to flight. New York: McGraw-Hill, 1989.

Propellers

- For a given airfoil section on a blade, the relative wind is due to a combination of
  - The aircraft's forward motion (inflow velocity normal to the propeller disk plane)
  - The propeller's rotational motion (tangential velocity in the propeller disk plane)

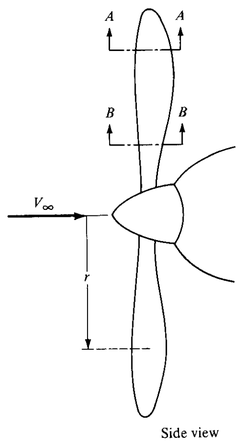

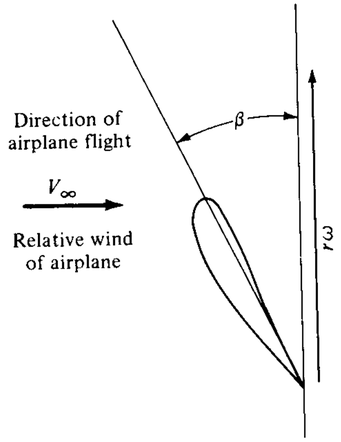

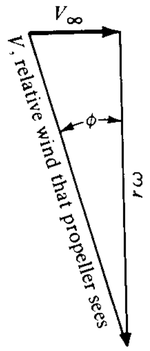

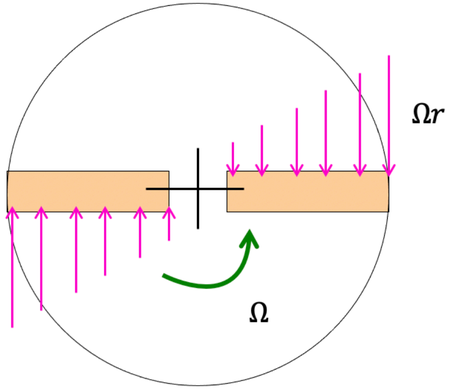

- ϕ: inflow angle (rad)
- β: twist angle
- α: angle of attack
- ω: angular speed (rad)
- n: rotational speed
- r: radius

Propellers

Twist is typically high at the root (around 50 degrees) and low at the tip (around 15 degrees) and this is due to the large differences in the magnitude of the $r\omega$ component of the relative wind (along with the natural desire to keep α within a reasonable range):

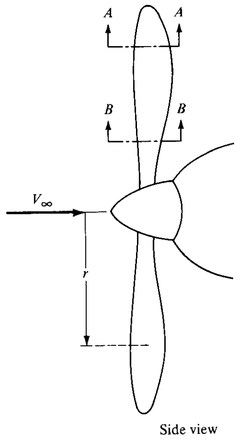

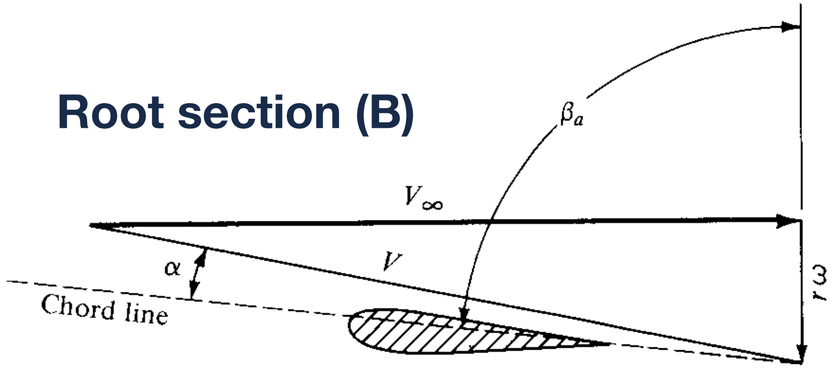

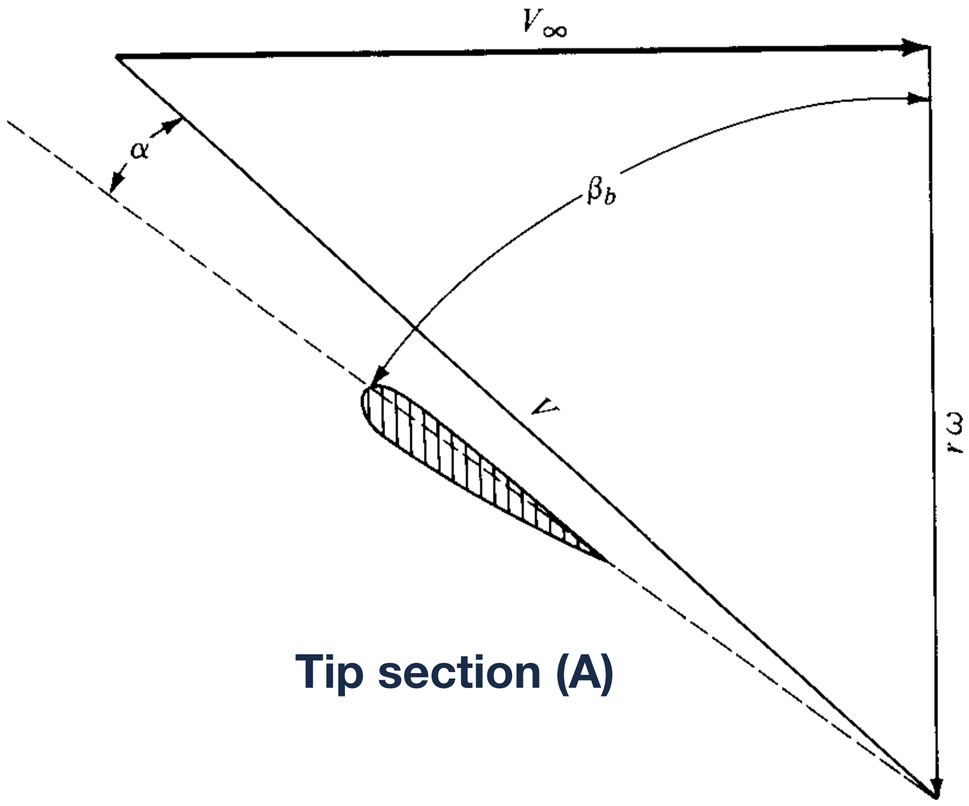

Anderson, John David. Introduction to flight.
New York: McGraw-Hill, 1989.

Propellers

Advance ratio

For a fixed pitch angle β, efficiency η is largely a function only of advance ratio J, defined as $J = \dfrac{V}{nD}$

where n is rotational speed and D is diameter.

Efficiency curves with fixed pitch

Efficiency is zero at $J = 0$ because speed is zero.

Efficiency is zero at some $J > 0$ because V has grown so large that lift is zero and so thrust is zero.

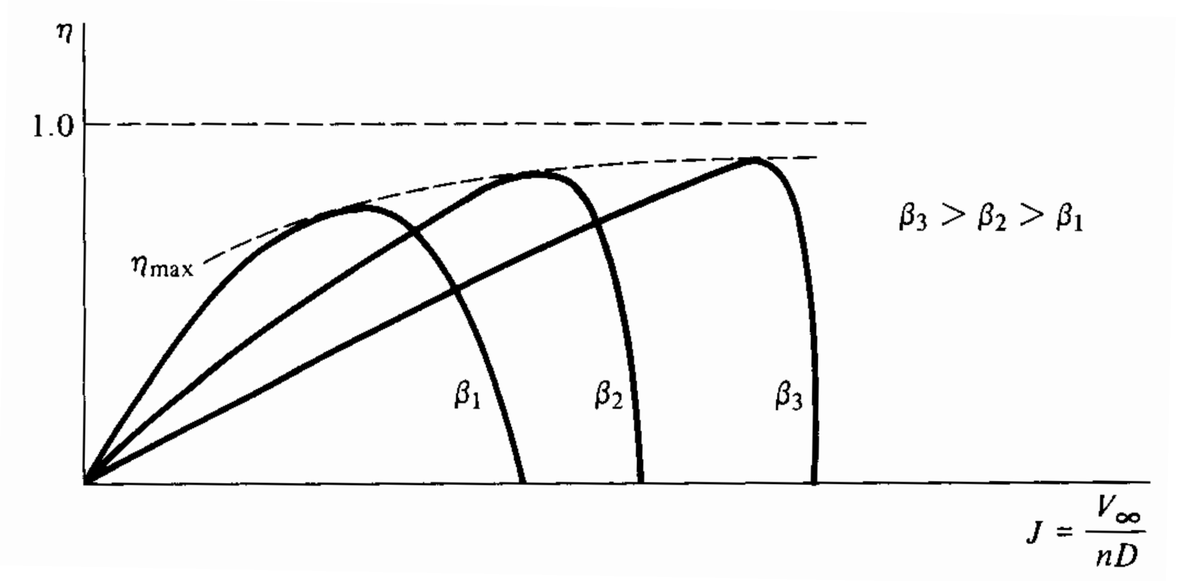

Anderson, John David. Introduction to flight.
New York: McGraw-Hill, 1989.

Estimating rotor power

We can relate power required by the rotor to thrust, based on the parameters, freestream velocity normal to the rotor disk, air density, and disk area:

$$P_{\text{disk}} = TV_{\infty\perp} + \kappa T\left(-\frac{V_{\infty\perp}}{2} + \sqrt{\frac{V_{\infty\perp}^2}{4} + \frac{T}{2\rho A_{\text{disk}}}}\right)$$

Chauhan, S. S., & Martins, J. R. (2020).
Tilt-wing eVTOL takeoff trajectory optimization.
Journal of aircraft, 57(1), 93-112.

where κ is a parameter that accounts for losses (a reasonable value is 1.2)

Compare this to $FOM = \frac{T}{P}\sqrt{\frac{T}{2\pi R^2 \rho}}$