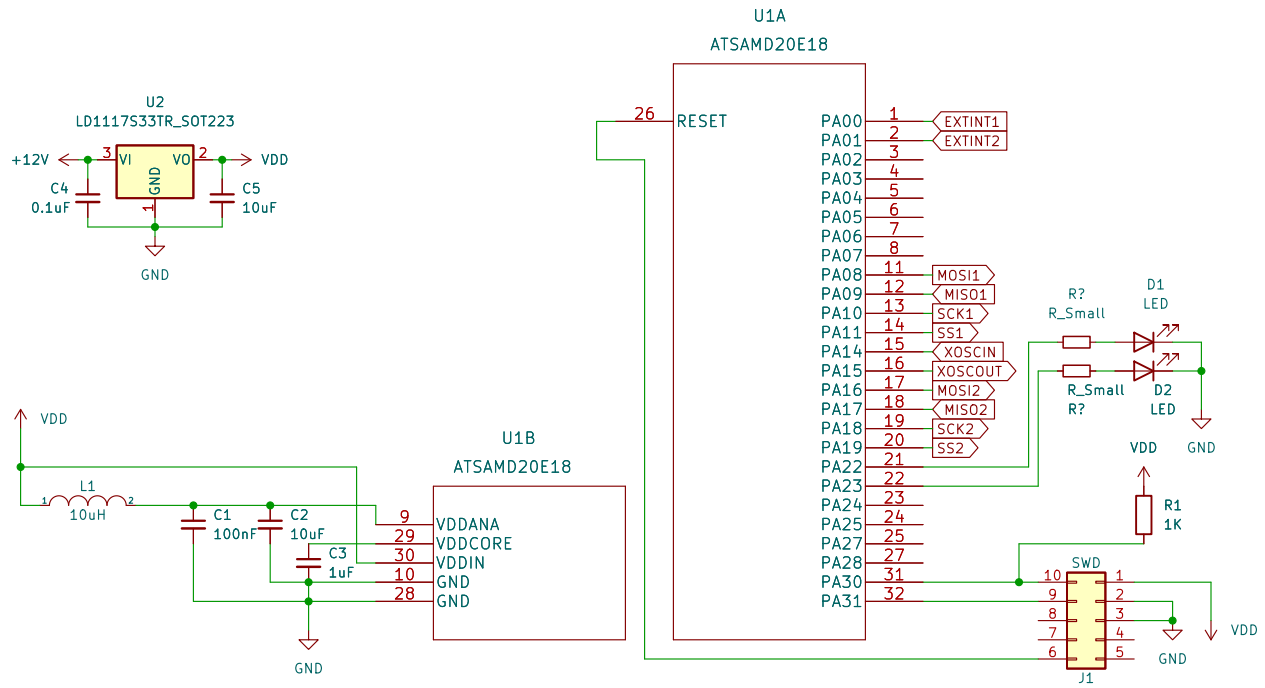

DCA

Sheet: /

File: MC.kicad_sch

Title: ATSAMD20E18 Control Circuit

Size: USLetter	Date: 2022-10-20	**Rev: 1**
KiCad E.D.A. eeschema (6.0.7)		Id: 1/1