DUAL DESKMOUNT

key features:
Deskmount suitable for 2 screens
Suitable for screens up to 24"
Maximium screen weight: 6KG
Vesa compliant 75 & 100mm
Vesa Tilts forward and back
Arms rotate for better viewing angle.
Vesa rotates for better viewing angle.

Install the deskmount in a few easy steps.

1: Push Pole into Base assy and lock in place with screw
2: Slide Arm assy over pole and lock in place
3: Screw Vesa assy to back of screen
4: Place vesa assy inside arm assy and lock with handwheel

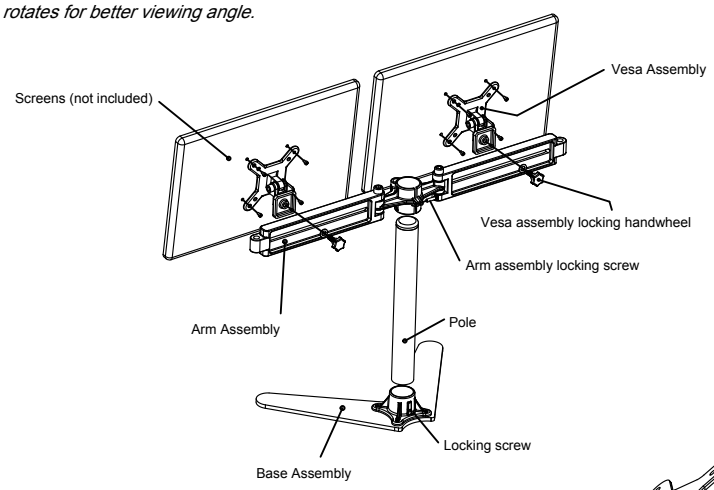

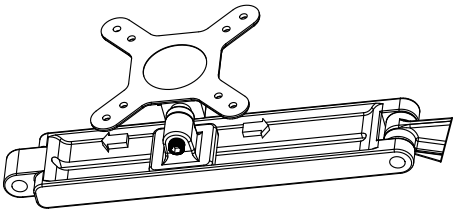

Vesa assy slides in arm assy

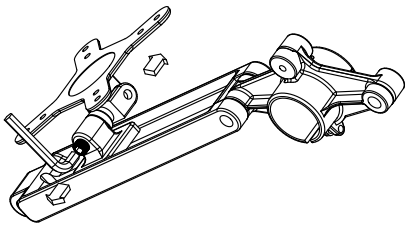

Adjust screw and the vesa will move up and down.
Use this if the screen do not line up perfectly.

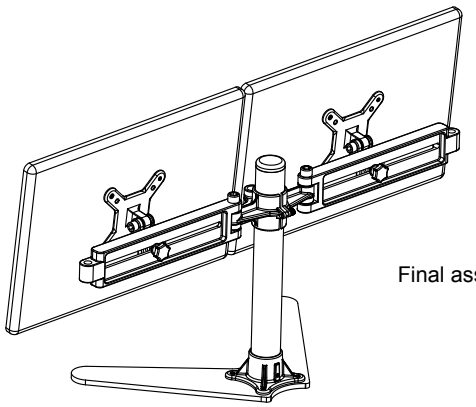

Final assembly

Manufactured in the UK.