Monitor Array Setup Instructions

1. Install pole into base & secure with locking screw

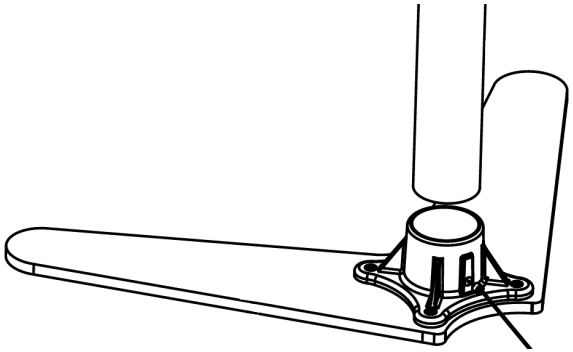

2. Slide central clamp down pole & secure with locking screw

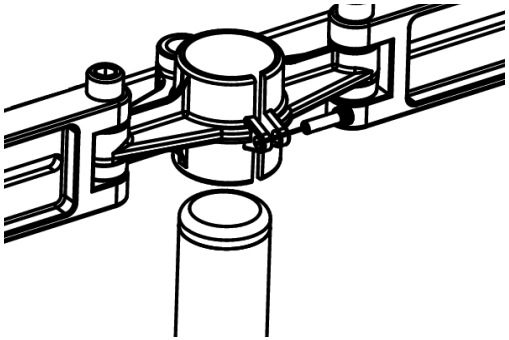

3. Attach VESA plate to back of monitor, and then slide into horizontal arm, secure with locking handwheel

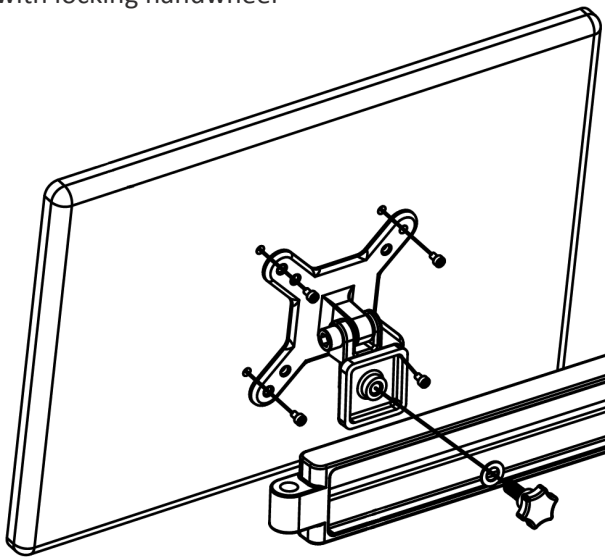

4. Where required attach a central VESA mount as pictured

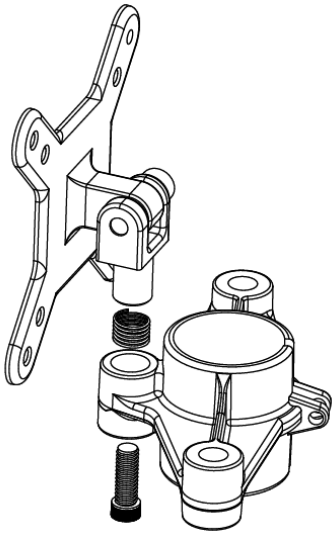

Aligning Your Monitors

Monitors can move horizontally across the arms

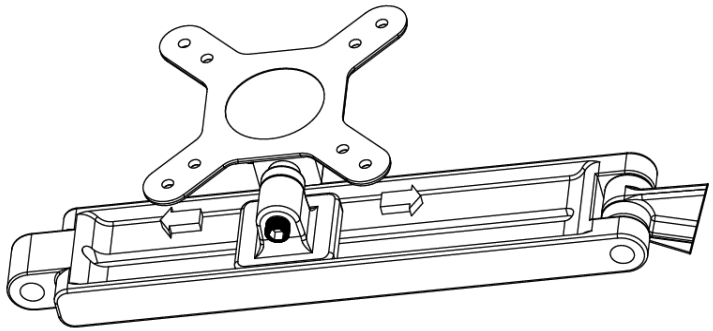

Each monitor can be moved up and down by adjusting the screw on the bottom of the VESA assembly

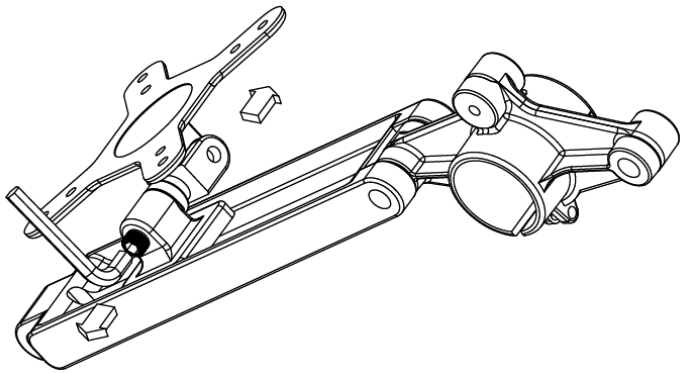

(P.T.O. For common layout configurations & assembly notes)

Monitor Array Layouts & Installation Notes

Installation Notes

We recommend that you lay your monitors on a flat surface face down before attaching the VESA assembly.

Ensure the vertical height adjustment screw on your VESA assembly (pictured on page 1) is pointing down when attaching them to your arms.

Please make sure your base is positioned on a flat and level surface, if not then aligning your screens will be difficult.

Please do not over-tighten screws as this could cause damage to your stand.

If your screens appear to 'sag' forward once assembled please tighten the screw located behind the VESA mount with the tool provided.

Take care when swinging in your horizontal arms when screens are mounted, bringing them too far forwards could destabilise the array.

Dual Array

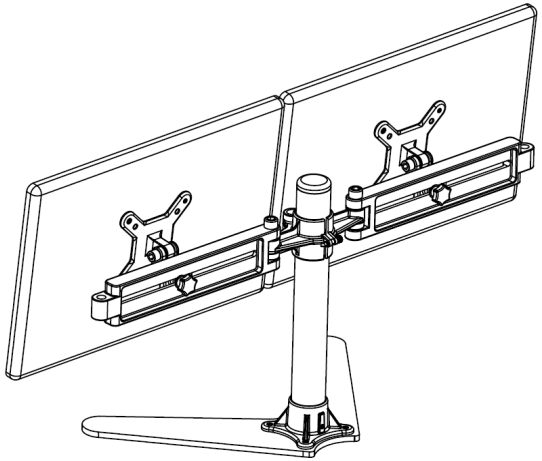

Quad Array

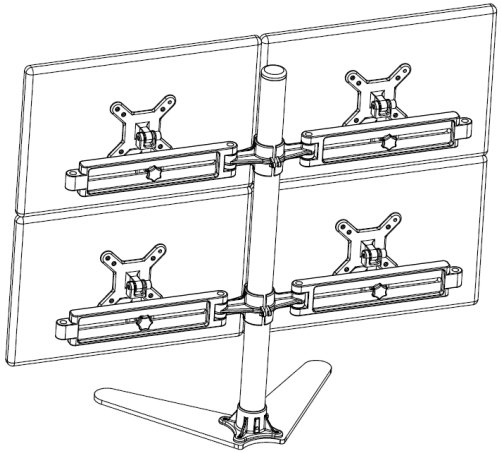

Triple Array

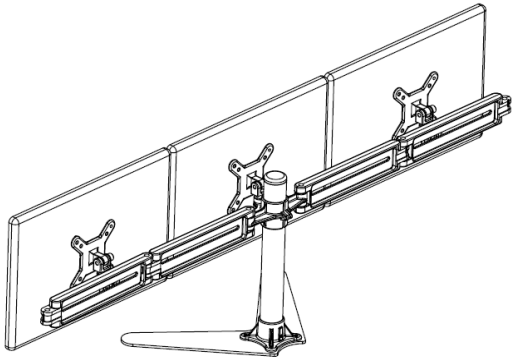
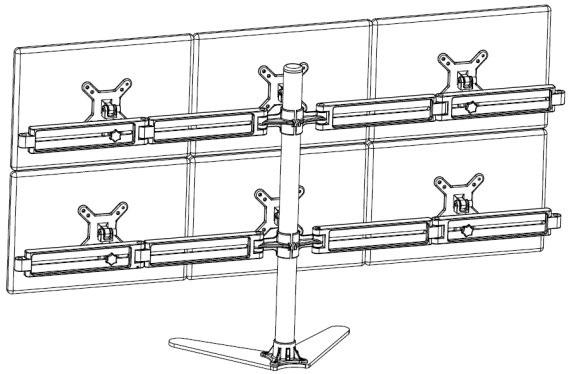
Six Array