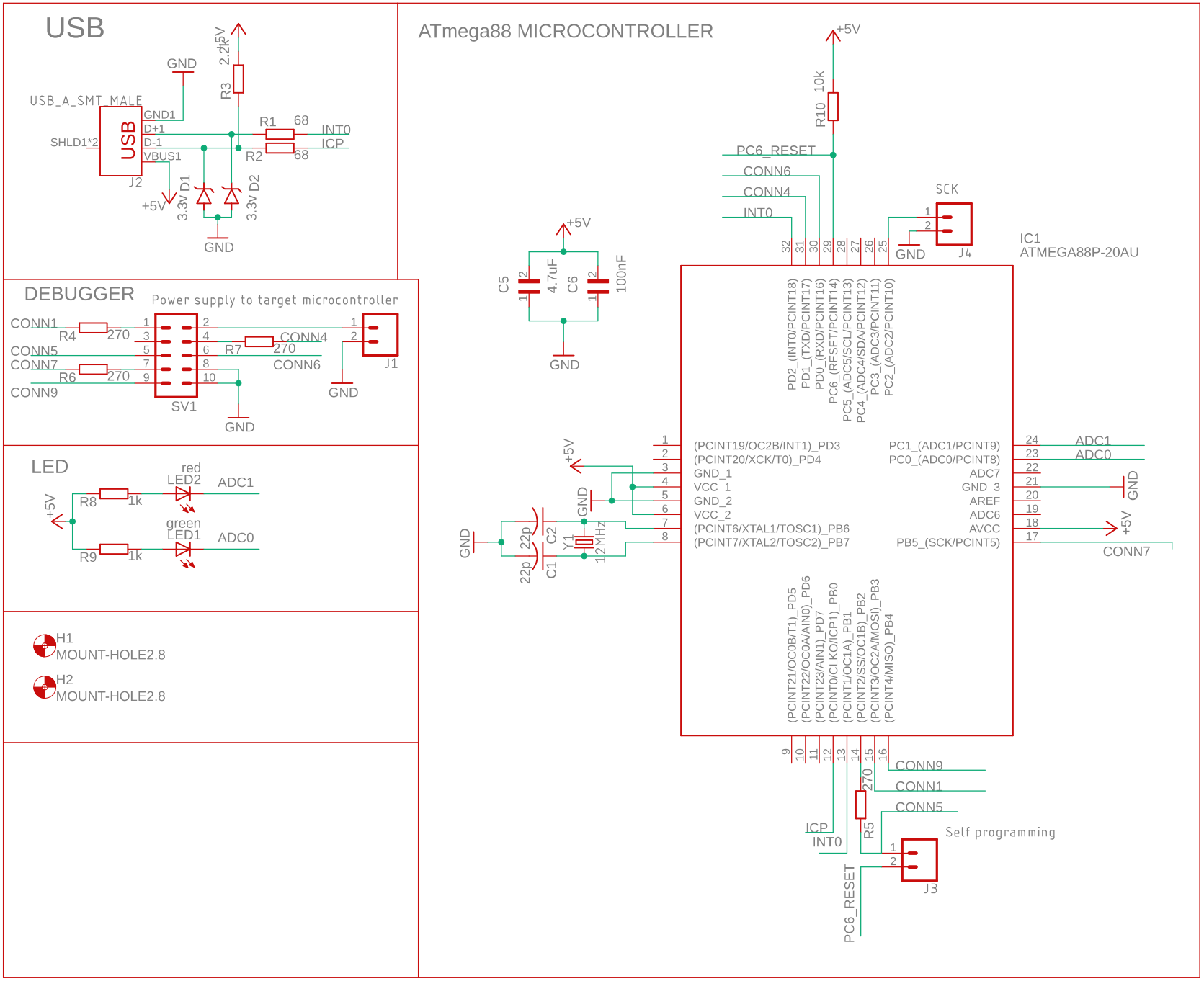

05-07-2023 19:29 C:\Users\Hp\Documents\EAGLE\projects\USBap programmer\usbasp.sch (Sheet: 1/1)