THIS DOCUMENT AND THE DATA DISCLOSED HEREIN OR HEREWITH IS THE PROPERTY OF ALTIUM LIMITED AND MAY BE FREELY DISTRIBUTED IN WHOLE. NO RIGHTS ARE RESERVED OR EXPRESS OR IMPLIED WARANTEE GIVEN.

REVISION	DESCRIPTION	DATE	APPROVED

DC/DC 24V -> 5V

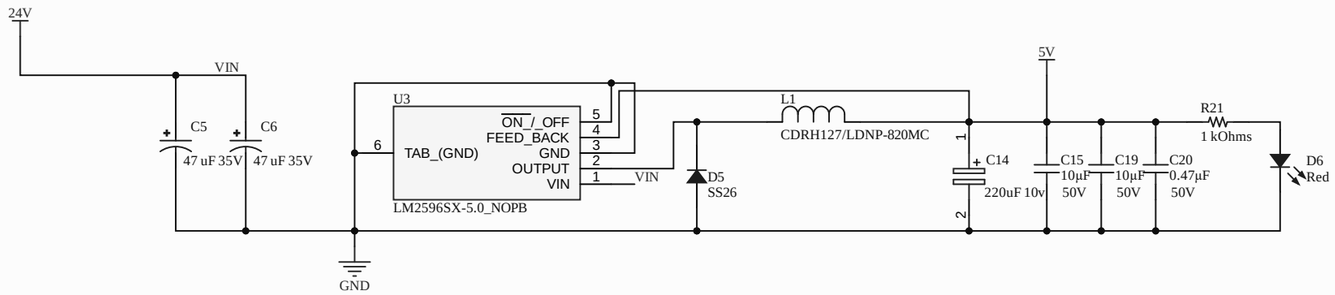

24V VCC

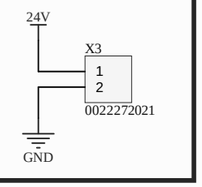

POT

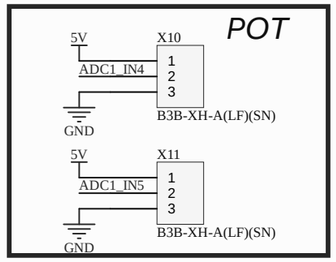

EEPROM

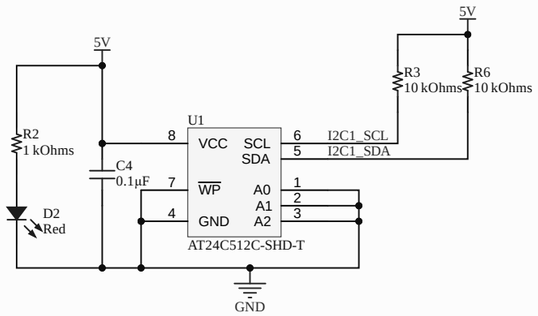

MCU

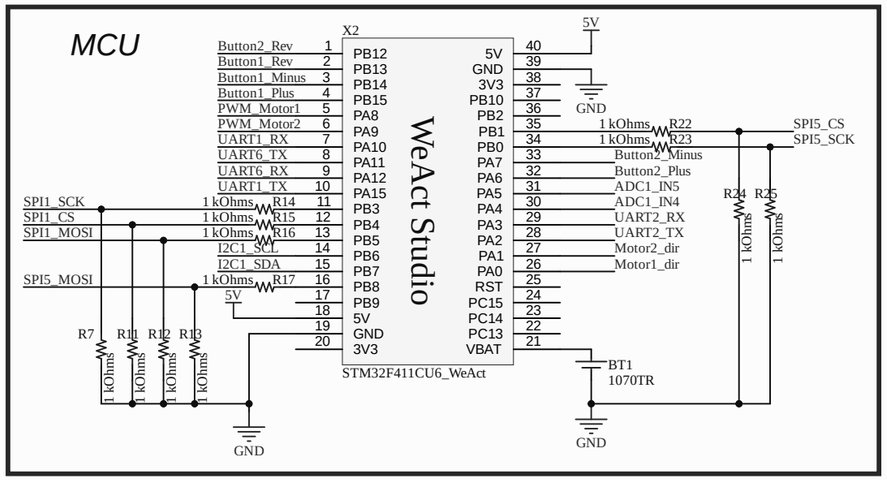

Manipule 1 Connection

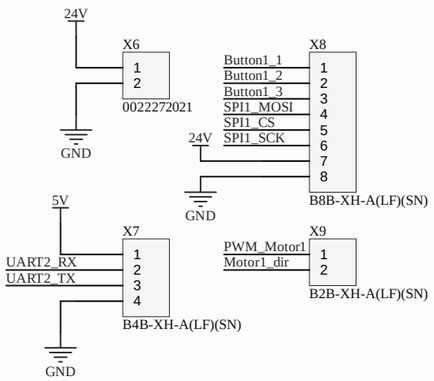

UART->RS232

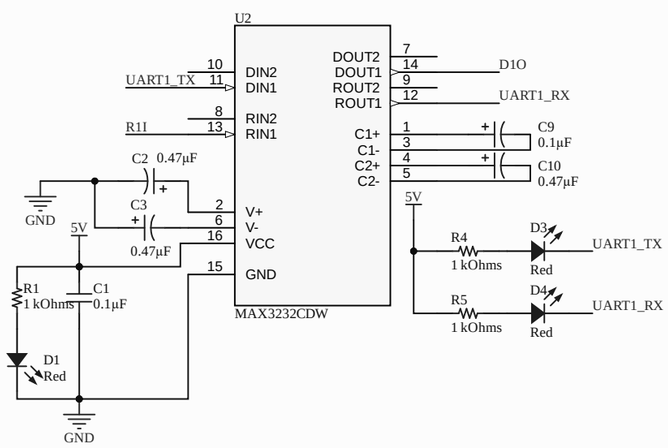

Schmitt-Trigger Inverter

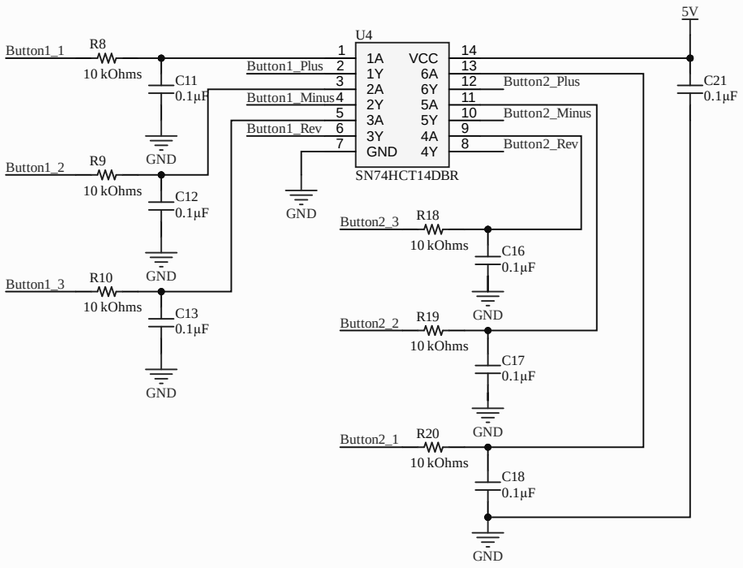

Manipule 2 Connection

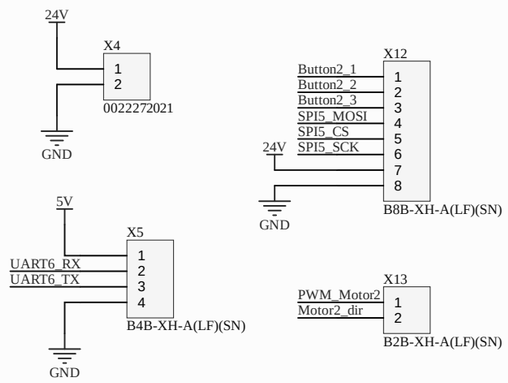

Display Connection

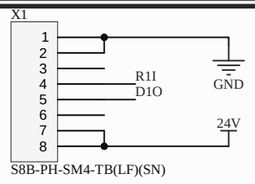

APPROVALS	DATE
ENG: *	
DSN: *	
CHK: *	
REFERENCE DOCUMENTS	
BOM:	
ASSY DWG:	
FAB DWG:	
PCB DWG:	

PROJECT: Altium

PROJECT REVISION: Not in version control | DOCUMENT REVISION: Not in version control | DESIGN ITEM:

TITLE: *

SIZE	CAGE CODE	DWG NO.	REV
A3			

SCALE: | FILE NAME: Main.SchDoc | SHEET 1 OF 1