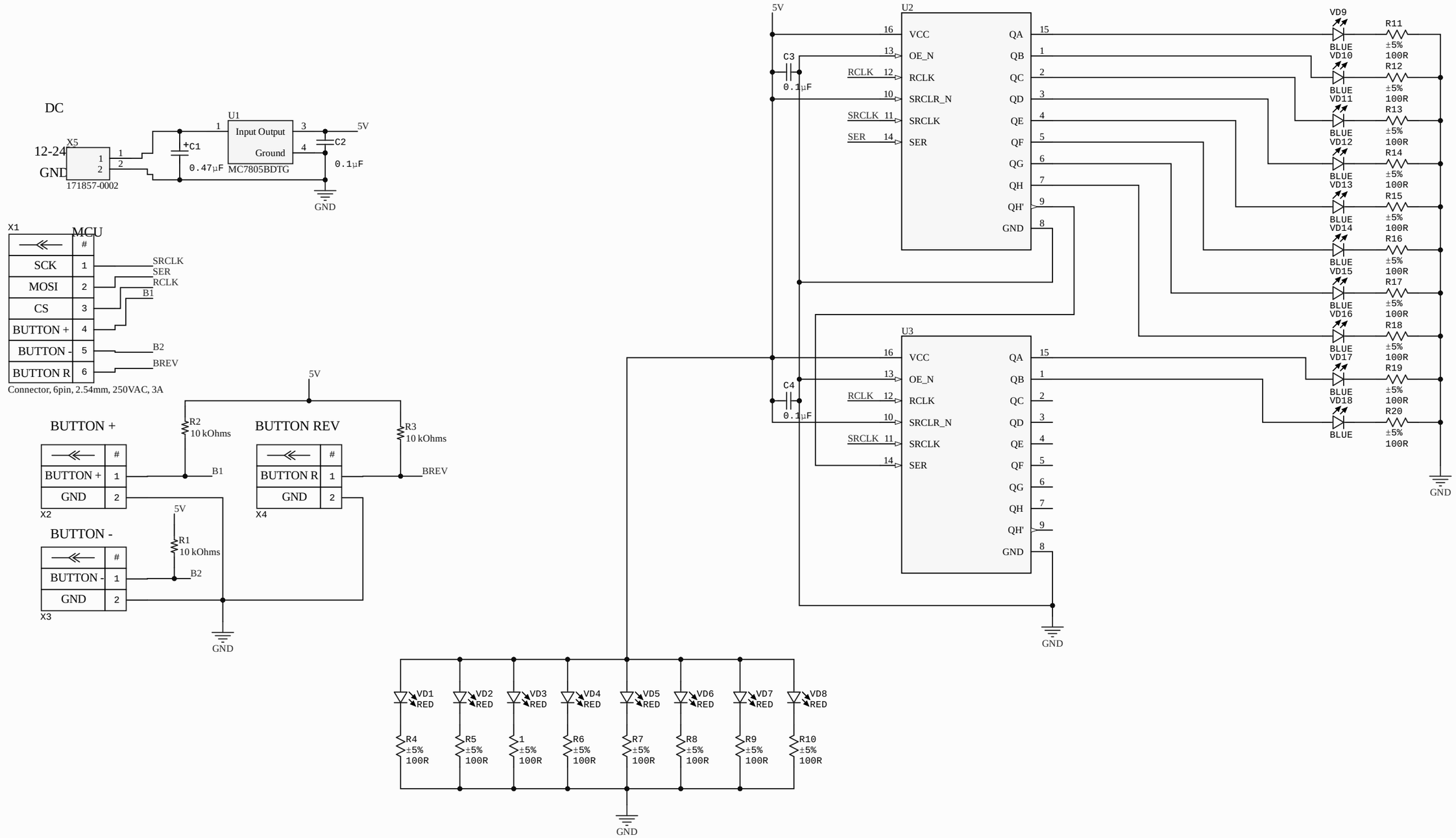

Title		
Size A3	Number	Revision
Date: 2.26.2024		Sheet of
File: C:\Users\..\LED.SchDoc		Drawn By: