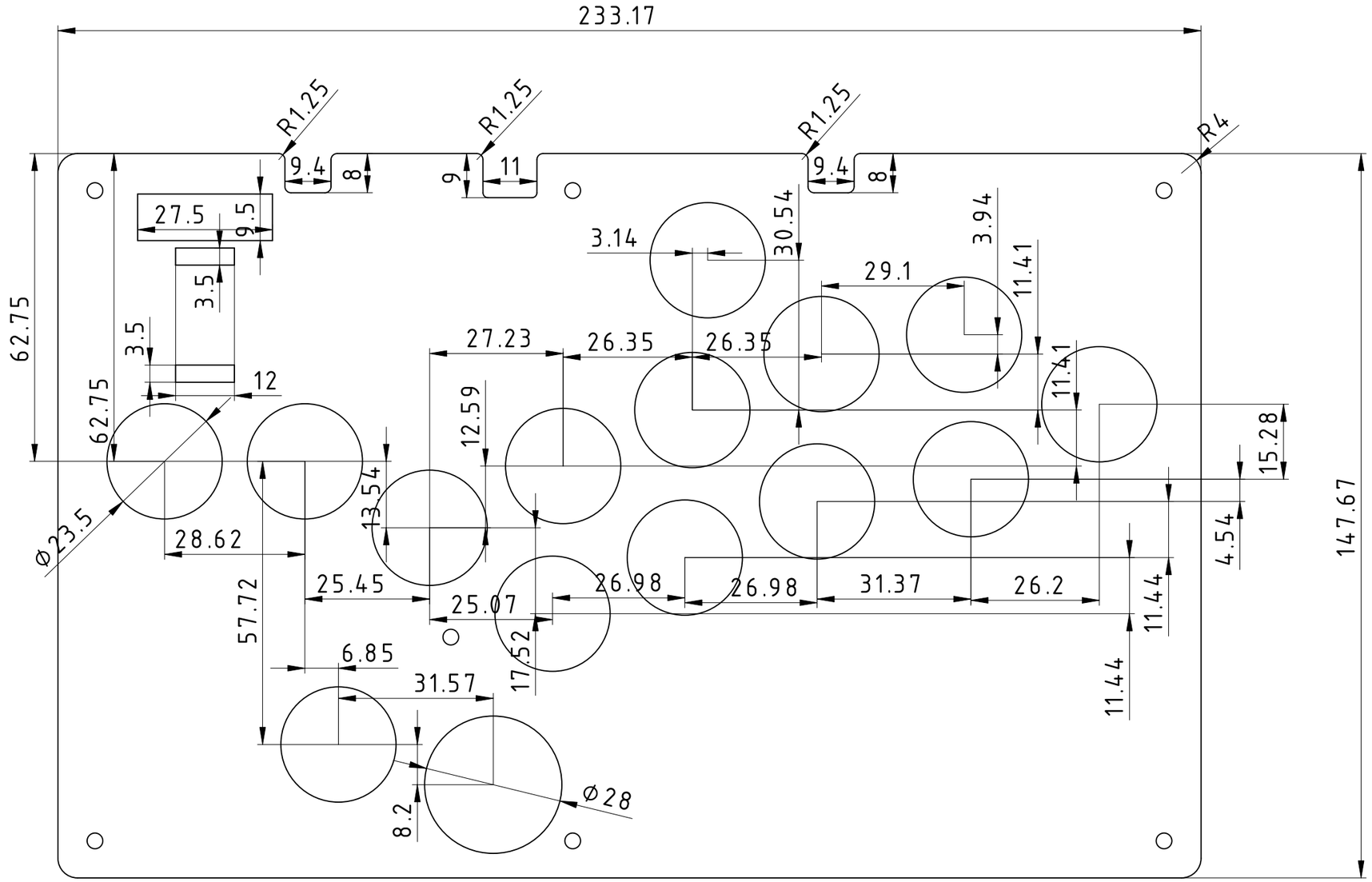

Notes:

Layer Thickness: 3mm

Author: mizma Appr.: -	Legal owner: mizma	Scale: M 1:1 Toler.: -	Sheet: 1 of 6 Size: A3
TITLE: ergoSHIFT arcade Acrylic cut layer 02		Part material: Acrylic Part number: ERGOSHIFT-ACR02-01 Drawing no.: ERGOSHIFT-ACR02-01	
Document type: part drawing		Date: 2023-12-22	Revision: REV 2

(R) DO NOT DUPLICATE THIS DRAWING TO THIRD PARTIES WITHOUT OWNER'S PERMISSION!