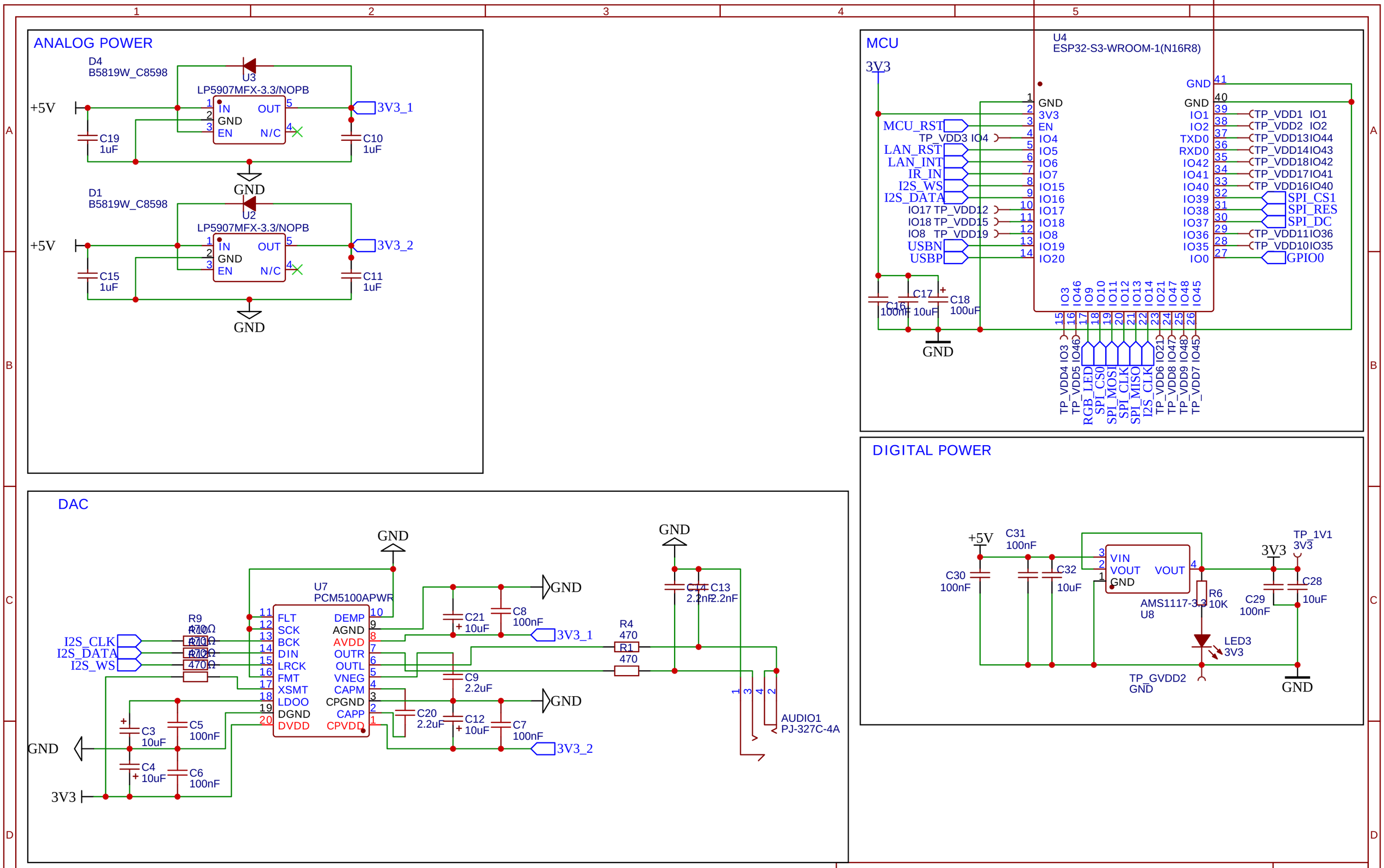

TITLE: HiFi ESP32-S3 (Gen 2)	REV: G
Company: Sonocotta	Sheet: 1/2
Date: 2024-09-04	Drawn By: andriy@sonocotta.com

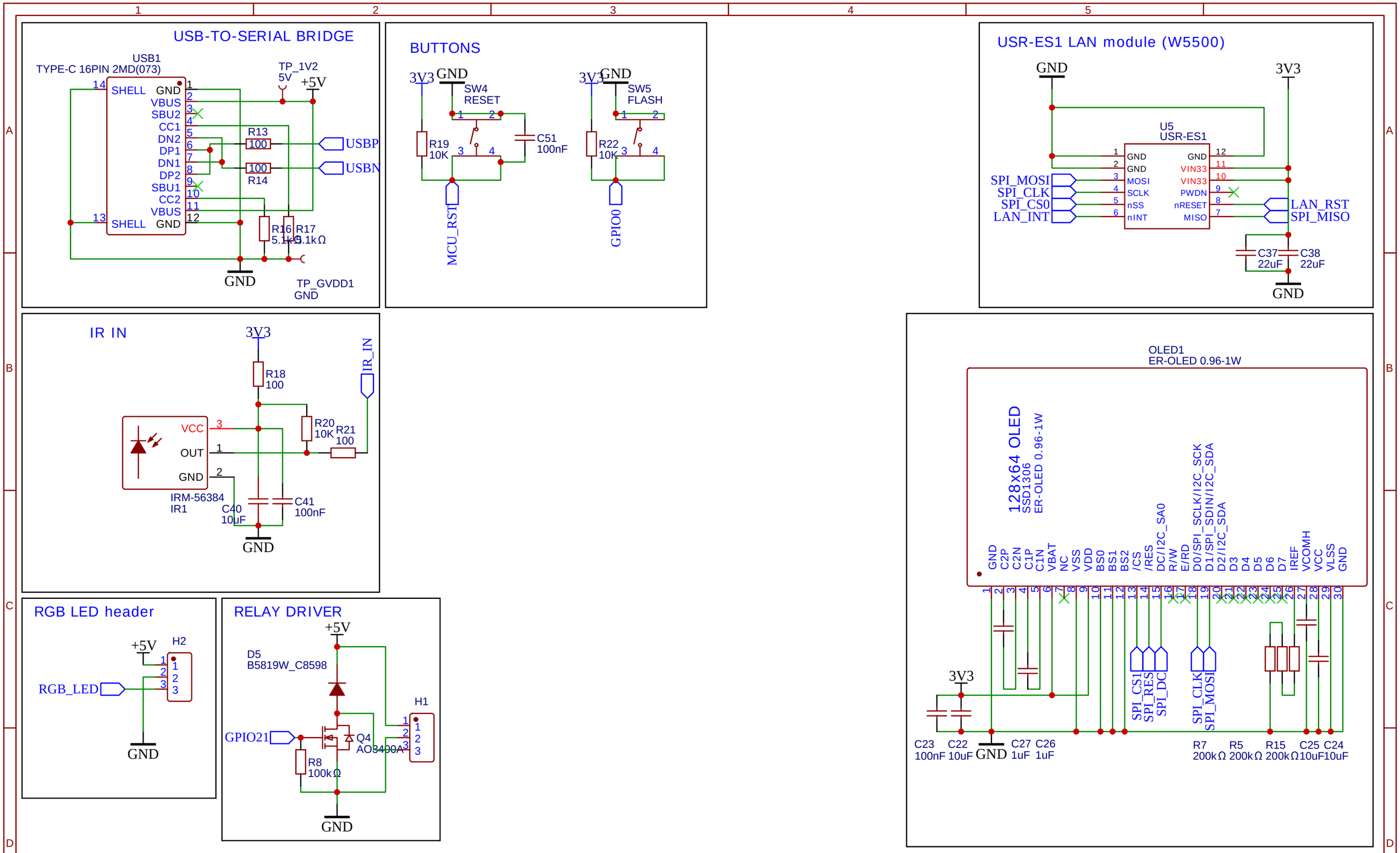

TITLE: HiFi ESP32-S3 (Gen 2)		REV: G
EasyEDA	Company: Sonocotta	Sheet: 2/2
	Date: 2024-09-04 Drawn By: andriy@sonocotta.com	