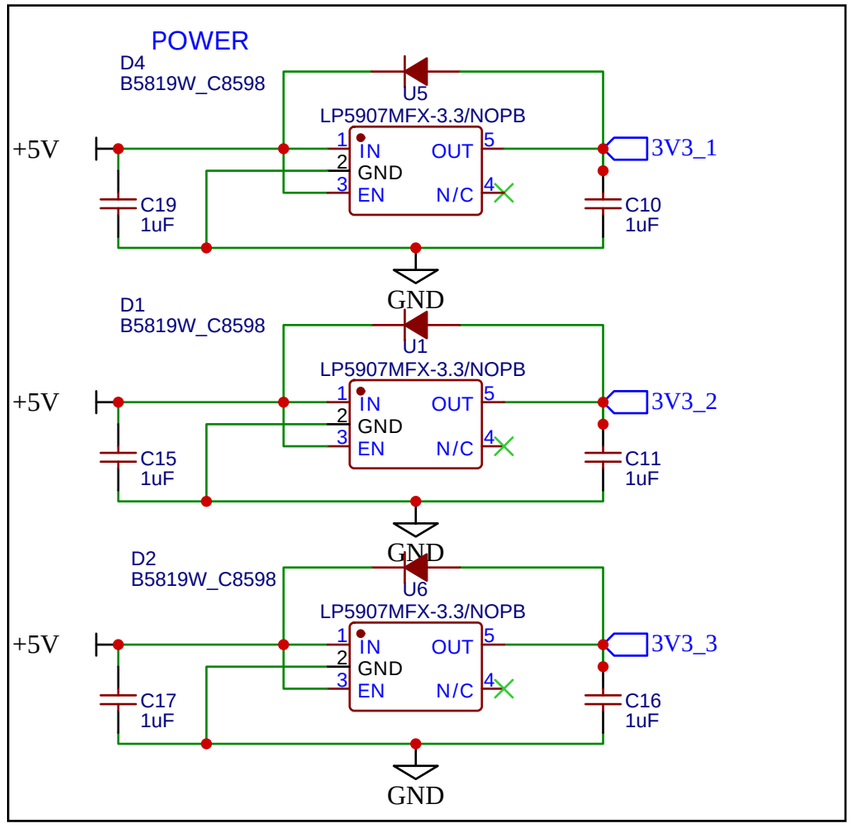

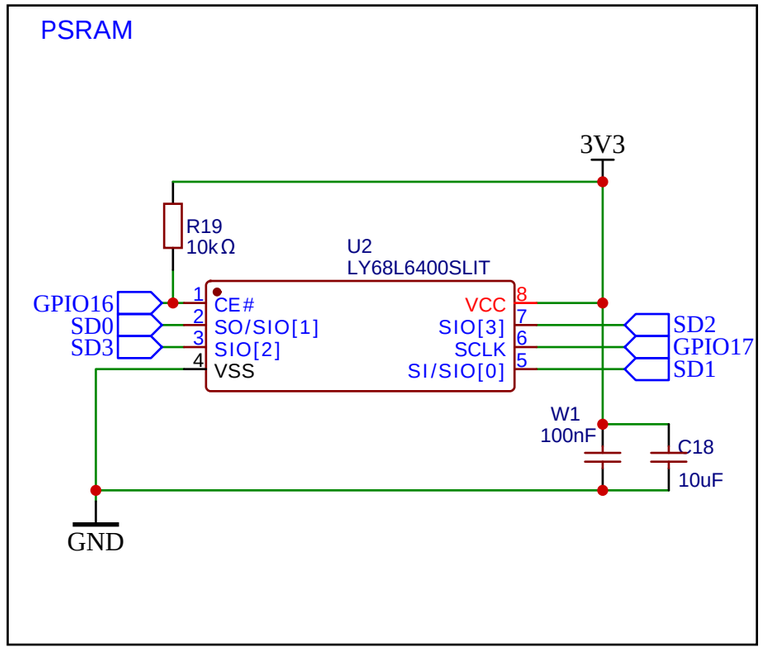

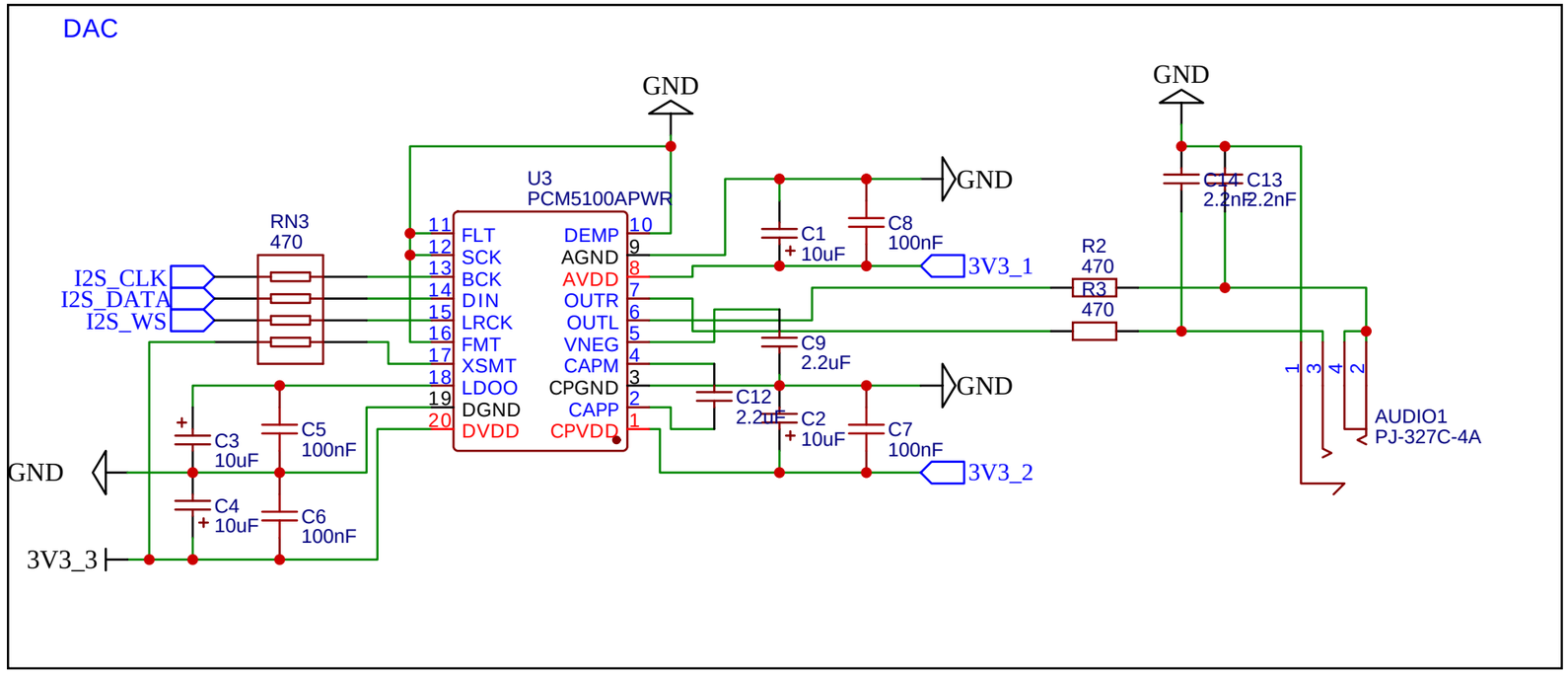

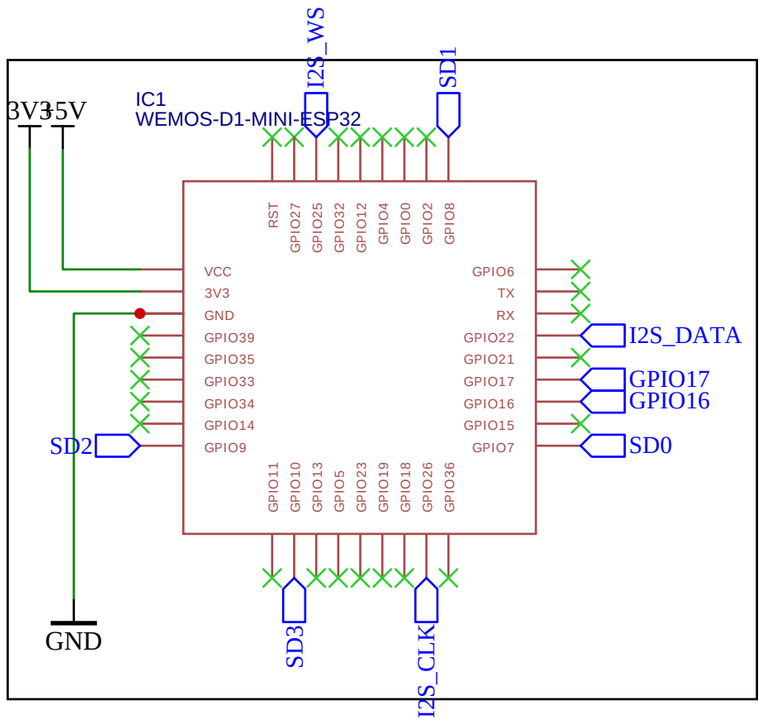

TITLE: HiFi ESP32 Micro		REV: A
EasyEDA	Company: Sonocotta	Sheet: 1/1
	Date: 2023-01-08 Drawn By: andriy@sonocotta.com	