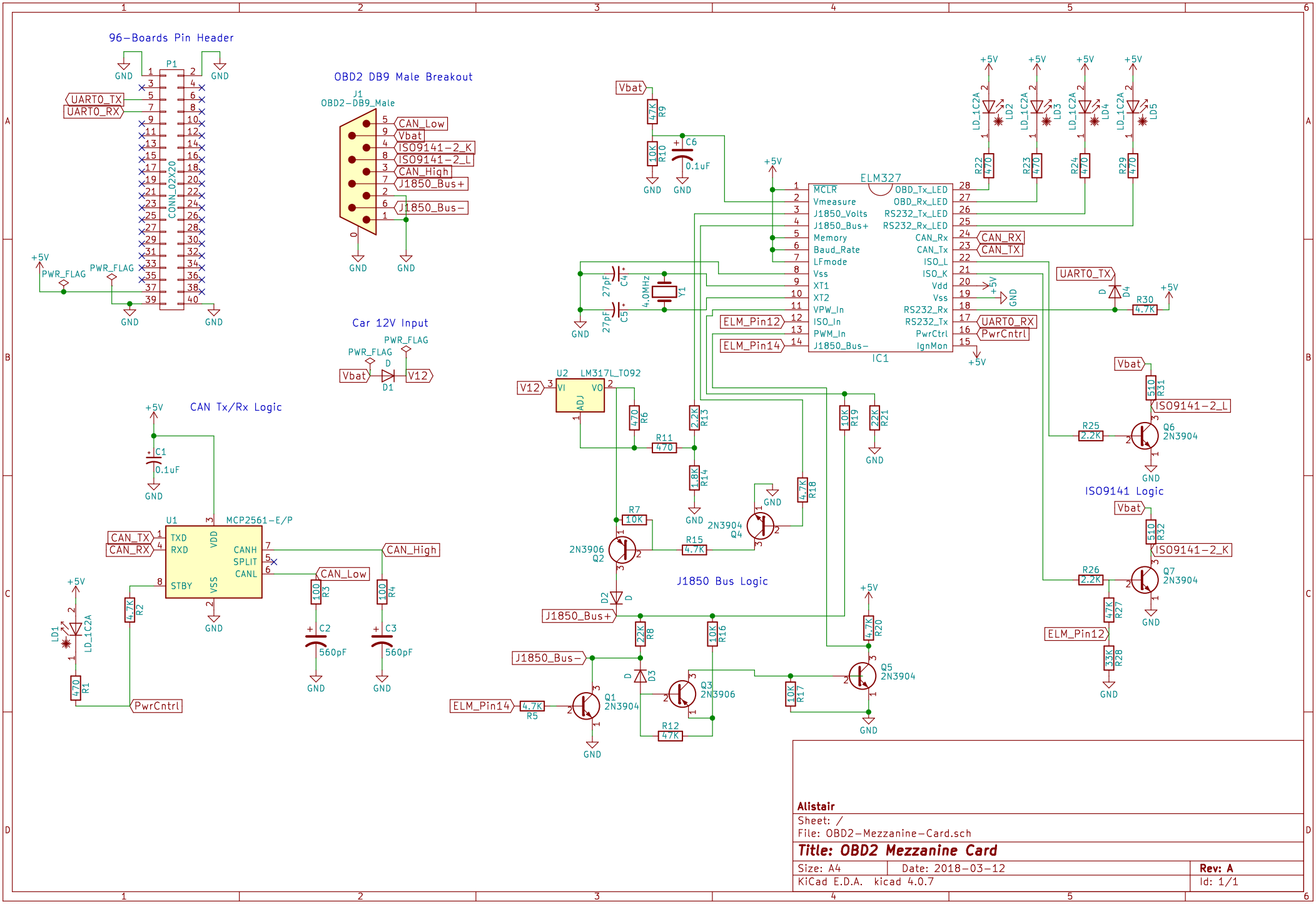

Alistair

Sheet: /

File: OBD2-Mezzanine-Card.sch

Title: OBD2 Mezzanine Card

Size: A4	Date: 2018-03-12	Rev: A
KiCad E.D.A. kicad 4.0.7		Id: 1/1