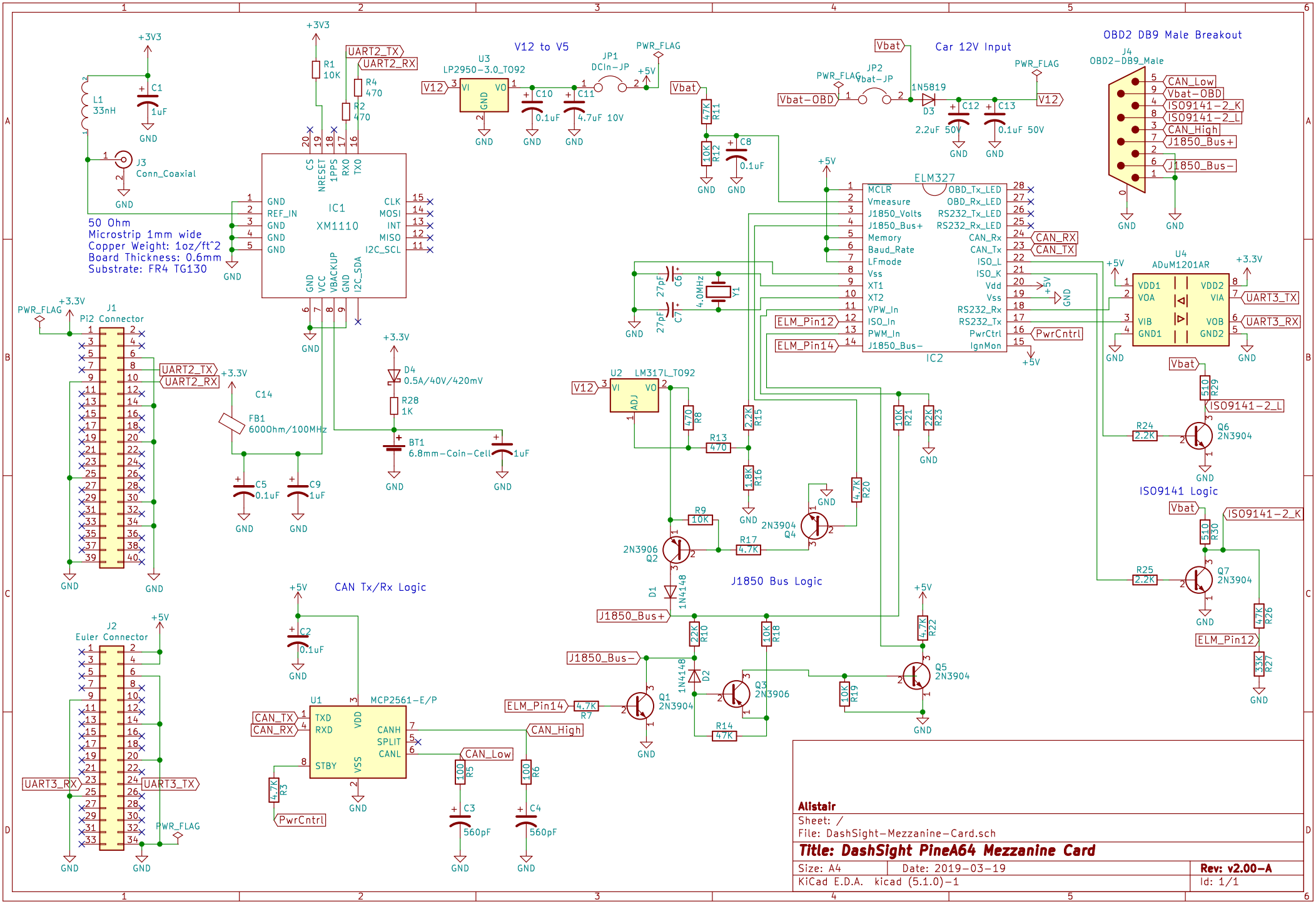
V12 to V5
Car 12V input
OBD2 DB9 Male Breakout
J4
OBD2-DB9_Male
U3
LP2950-3.0_TO92
JP1
DCIn-JP
JP2
Vbat-JP
1N5819
D3
C12
2.2uF 50V
C13
0.1uF 50V
PWR_FLAG
+3V3
+5V
+3.3V
Vbat
Vbat-OBD
V12
R1
10K
R2
470
R4
470
UART2_TX
UART2_RX
L1
33nH
C1
1uF
J3
Conn_Coaxial
IC1
XM1110
CS
NRESET
1PPS
RX0
TX0
GND
REF_IN
CLK
MOSI
INT
MISO
I2C_SCL
VCC
VBACKUP
I2C_SDA
50 Ohm
Microstrip 1mm wide
Copper Weight: 1oz/ft^2
Board Thickness: 0.6mm
Substrate: FR4 TG130
J1
Pi2 Connector
C14
FB1
600Ohm/100MHz
C5
0.1uF
C9
1uF
D4
0.5A/40V/420mV
R28
1K
BT1
6.8mm-Coin-Cell
1uF
ELM327
IC2
MCLR
Vmeasure
J1850_Volts
J1850_Bus+
Memory
Baud_Rate
LFmode
Vss
XT1
XT2
VPW_In
ISO_In
PWM_In
J1850_Bus-
OBD_Tx_LED
OBD_Rx_LED
RS232_Tx_LED
RS232_Rx_LED
CAN_Rx
CAN_Tx
ISO_L
ISO_K
Vdd
RS232_Rx
RS232_Tx
PwrCtrl
IgnMon
CAN_RX
CAN_TX
PwrCntrl
ELM_Pin12
ELM_Pin14
27pF
C6
C7
4.0MHz
Y1
U4
ADuM1201AR
VDD1
VOA
VIB
GND1
VDD2
VIA
VOB
GND2
UART3_TX
UART3_RX
R24
2.2K
R25
2.2K
Q6
2N3904
Q7
2N3904
ISO9141 Logic
ISO9141-2_L
ISO9141-2_K
R29
510
R30
510
R26
47K
R27
33K
U2
LM317L_TO92
R8
470
R13
470
R15
2.2K
R16
1.8K
R20
4.7K
R21
10K
R23
22K
R9
10K
R17
4.7K
2N3906
Q2
2N3904
Q4
D1
1N4148
J1850 Bus Logic
R10
22K
R18
10K
R22
4.7K
D2
1N4148
Q1
2N3904
Q3
2N3906
Q5
2N3904
R19
10K
R14
47K
R7
4.7K
J2
Euler Connector
CAN Tx/Rx Logic
C2
0.1uF
U1
MCP2561-E/P
TXD
RXD
STBY
VDD
VSS
CANH
SPLIT
CANL
CAN_TX
CAN_RX
CAN_High
CAN_Low
R3
4.7K
R5
100
R6
100
C3
560pF
C4
560pF
Alistair
Sheet: /
File: DashSight-Mezzanine-Card.sch
Title: DashSight PineA64 Mezzanine Card
Size: A4
Date: 2019-03-19
Rev: v2.00-A
KiCad E.D.A. kicad (5.1.0)-1
Id: 1/1