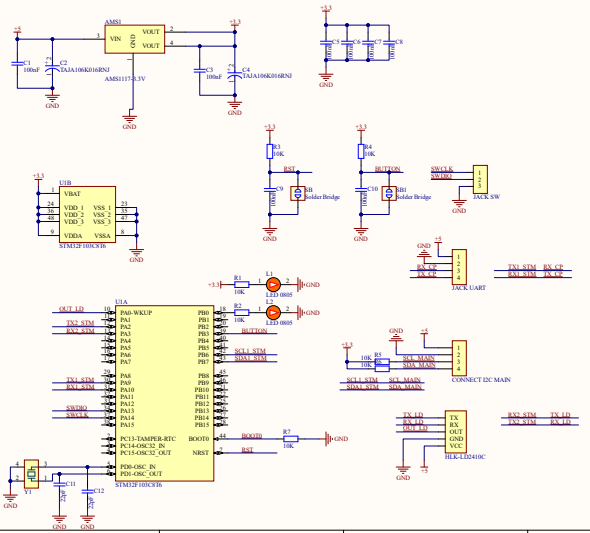

Title		
Size A1	Number	Revision
Date: 5/08/2025		Sheet of
File: D:\Altium\...STM32SchDoc.SchDoc		Drawn By: