Electrical Topology Diagram (Implementation v6)

As-of date: `2026-03-20`

Purpose: provide a complete, install-level electrical topology for the current build scope, including all major electrical components, fuse IDs, fuse housings, planned wire gauges, and estimated one-way run lengths for procurement planning.

Related docs:

- Canonical electrical/system baseline: `docs/core/SYSTEMS.md`
- Detailed fuse matrix: `docs/implementation/ELECTRICAL_fuse_schedule.md`
- Battery and trunk recalculation record: `docs/studies/ELECTRICAL_battery_fuse_wire_recalc_2026-02-18.md`
- Decisions and unresolved items: `docs/core/TRACKING.md`
- Procurement source of truth: `bom/bom_estimated_items.csv`

Sweep Outcomes Included In This Revision

- Re-based alternator charging architecture from Sterling B2B to dedicated `48V` secondary alternator path (`Mechman + WS500 + APM-48` baseline).
- Re-based Lynx Slot 3 branch to alternator input with `F-04 150A` (`58V/80V` MEGA).
- Retired legacy Sterling engine-bay path (`F-08` , `C-16` , `C-17`) from active architecture.
- Added WS500 low-current fused-lead visibility (`F-12/F-13/F-14`) in topology and conductor schedule.
- Added Ford `Upfitter #3 -> F-15 -> WS500 brown ignition` manual alternator-control path.
- Added explicit fuse-holder/housing definitions for every fuse family (`Class T` , Lynx `MEGA` , inline `MIDI/ANL/AMI` , PV `gPV` , and `ATO/ATC`).
- Added conductor schedule across `48V` , `12V` , PV, and AC segments with explicit assumptions.
- Updated 12V topology to a shared 12V junction fed by an Orion-Tr Smart `48/12-30` charger and a `12V 100Ah` buffer battery branch, with `F-11` source fuse plus `SW-12V-BATT` manual isolation.
- Added a full-circuit estimated run-length validation pass (`C-01` through `C-40`) and purchase-ready wire rollup totals.

Length Estimation Defaults Used In This Pass

1. Cabinet internal interconnect default: `2.5 ft` one-way (`ASSUMED`).
2. Cabinet-to-near load branch default: `8 ft` one-way (`ASSUMED`).
3. Cabinet-to-far load branch default: `12 ft` one-way (`ASSUMED`).
4. AC branch to receptacle chain default: `15 ft` one-way per branch leg (`ASSUMED`).
5. Policy lock: use the smallest gauge that meets current and voltage-drop targets; do not auto-upsize, but flag warnings when margin is tight.
6. Parallel battery bank lock: keep `BATT+_A/B/C` equal length and `BATT-_A/B/C` equal length.

Battery Fuse/Wire Recalculation Basis (2026-02-18 + 2026-03-19 sync)

- Scope in this pass is limited to battery-side and major `48V` trunk paths (`C-01` through `C-15`).
- Provisional battery listing inputs used: `51.2V 100Ah` , `<=200A` current limit per battery.
- Conservative sizing factors used in this pass:

1. Parallel-sharing factor `K_share = 1.5`
2. Continuous margin factor `K_cont = 1.25`

- Current envelope used for battery-discharge branch sizing in current architecture: `I_total = F-02 + F-05 = 125A + 40A = 165A` .
- Per-battery design current: `I_batt_design = (165A / 3) * 1.5 = 82.5A` .
- Continuous-adjusted minimum battery branch fuse threshold: `I_fuse_min = 82.5A * 1.25 = 103.1A` .
- Provisional battery branch fuse selection: `F-01A/B/C = 200A Class T` , constrained by the provisional battery `<=200A` current-limit listing.
- Final lock gate: validate true `51.2V` battery datasheet/manual current and terminal limits before permanent fuse lock; if lower limits are confirmed, move to `175A` .
- Cable procurement remains estimate-based until CAD/field run lengths are frozen. This pass sets a no-padding `2/0` estimate baseline of `77.5 ft` total (`42.5 ft` red, `35.0 ft` black), including the dedicated alternator migration path.

Complete Power Topology (48V Core + Charge Sources)

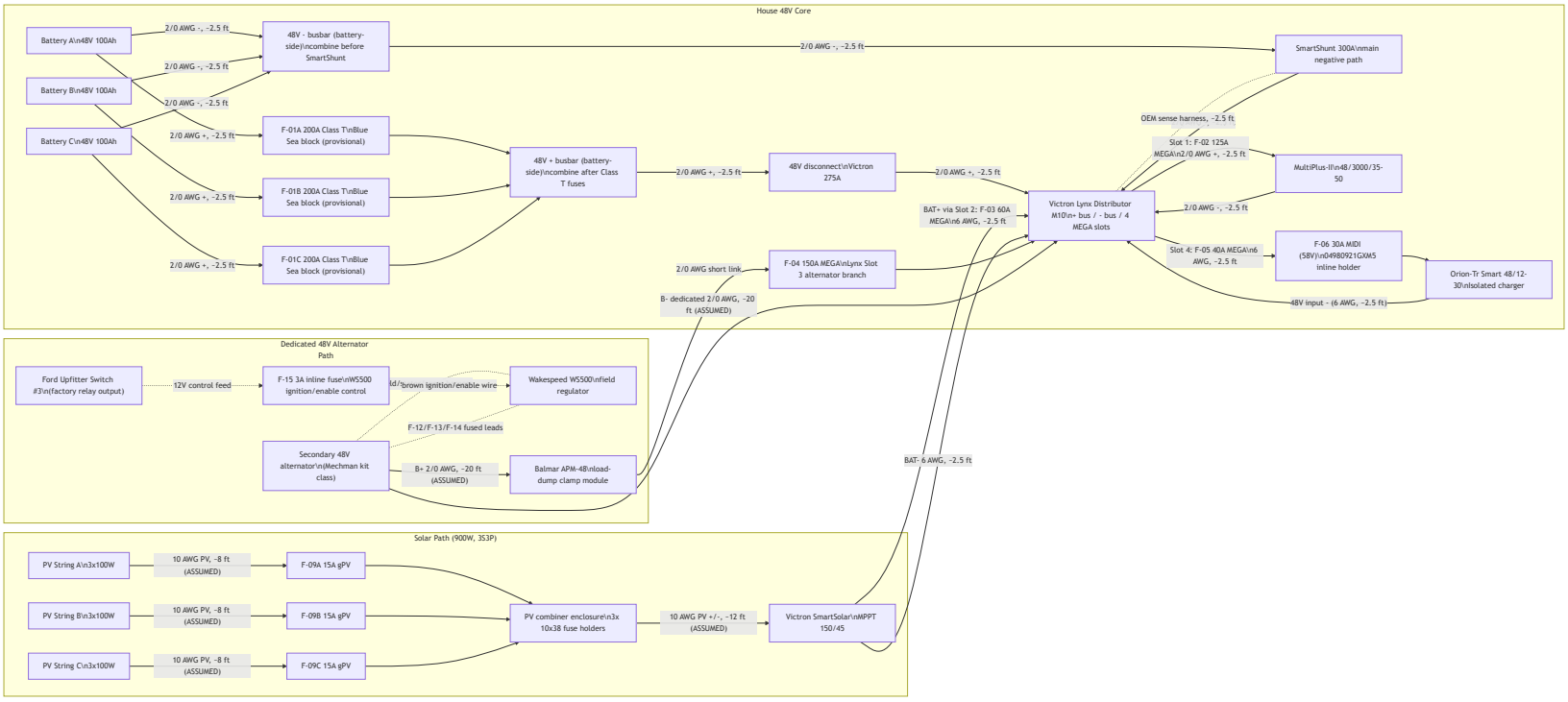

12V Distribution Topology (Shared Junction With Buffer Battery)

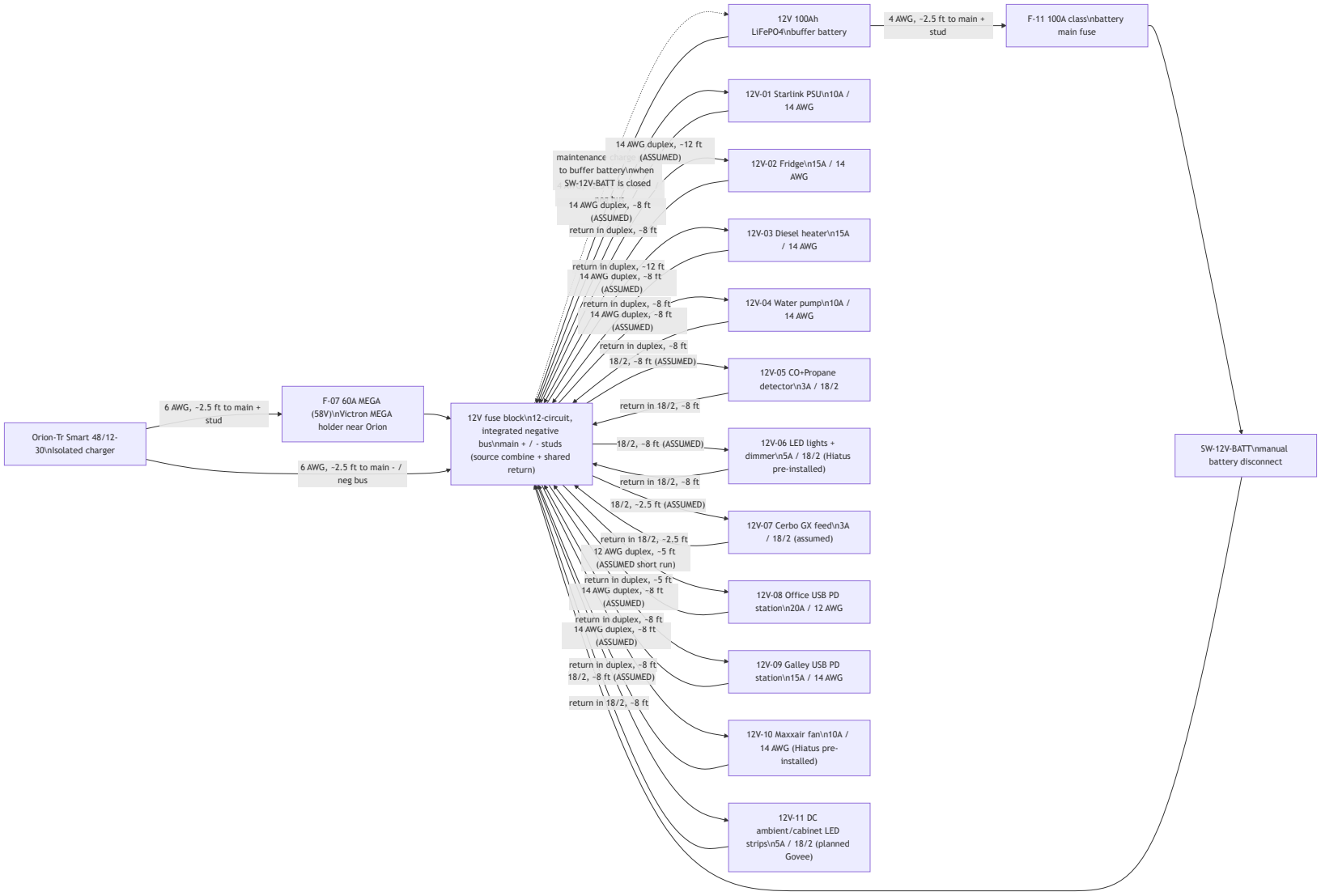

12V Operating Intent (Locked)

- Orion-Tr Smart `48/12-30` is the primary `12V` charger/feed source.
- `SW-12V-BATT` is **normally closed** in operation; open is service/isolation mode only.
- With `SW-12V-BATT` closed, Orion output at the fuse-block main `+` stud maintains/charges the `12V` buffer battery through the shared-junction path.
- With `SW-12V-BATT` open, the buffer battery is isolated from the main `+` stud; this mode is for service/troubleshooting only and not the default operating state.
- The buffer battery remains in the active operating path during normal use and is intended to absorb transients/peaks on the `12V` rail.
- The fuse block is the `12V` junction device in this baseline: main `+` stud is the source-combine point, and the integrated negative bus/main `-` is the shared return point.
- Do not solder-splice high-current source conductors; terminate with crimped lugs on rated studs/junction hardware.
- Hiatus pre-installed 12V branches are tracked here as `12V-06` (factory LED lights with dimmer) and `12V-10` (Maxxair fan); verify final installed branch labeling during electrical audit.
- Planned Govee/ambient strip lighting is a separate branch (`12V-11`) and not part of the Hiatus factory `12V-06` lighting circuit.
- DC-first lighting intent: keep ambient/cabinet strip lighting on `12V-11` so nighttime lighting does not require inverter operation.

AC Path Topology (Shore + Inverter Output, Full Hierarchy)

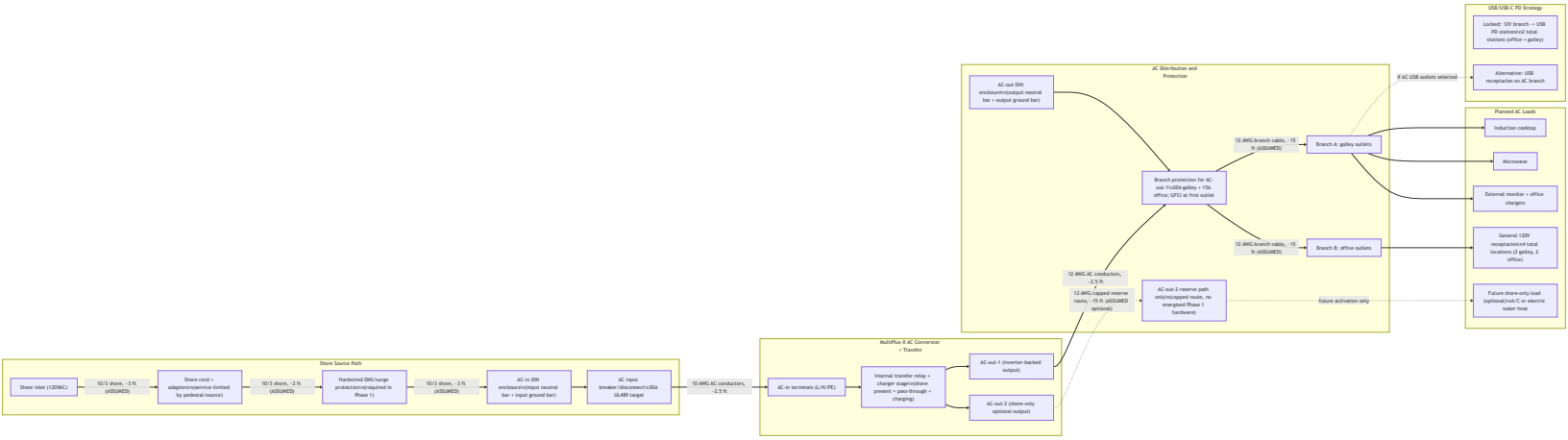

AC Operating Behavior (Expected)

- Shore present: MultiPlus transfer relay closes, AC-in is passed to AC-out paths, and charger stage charges the `48V` bank.
- Shore absent: MultiPlus transfers to inverter mode and powers `AC-out-1` from battery; `AC-out-2` drops by design.
- AC-in hardware is `30A` (`TT-30` + hardwired EMS + `30A` breaker + `10 AWG` AC-in conductors); set MultiPlus input current limit to actual source (`15A` , `20A` , or `30A`) to avoid pedestal/source breaker trips.

AC Safety/Protection Chain (What Must Exist)

- Upstream shore protection chain before MultiPlus AC-in: shore inlet -> hardwired EMS -> `30A` AC input breaker/disconnect.
- AC-out branch protection including UL943-class residual-current protection and overcurrent protection sized to branch wiring and expected load.
- Split-panel architecture with dedicated neutral/ground bars per AC enclosure and no AC-in/AC-out neutral mixing.
- Continuous equipment grounding path from shore inlet through MultiPlus and branch circuits, plus chassis bond in mobile install context.
- Neutral/ground handling must follow MultiPlus relay behavior; do not add an always-bonded downstream neutral-ground bond in branch receptacle wiring.

AC Reference Basis (Manufacturer Guidance)

- Victron MultiPlus-II `120V` installation guidance (`AC-in` breaker sizing, UL943-class residual-current protection on outputs, and AC-out-2 shore-only behavior): `https://www.victronenergy.com/media/pg/MultiPlus-II_120V/en/installation.html`
- Victron MultiPlus-II datasheet (`48/3000/35-50` baseline model reference): `https://www.victronenergy.com/upload/documents/Datasheet-MultiPlus-II-inverter-charger-120V-EN.pdf`

AC/USB Baseline Locked For BOM

- Shore interface: `30A` RV-style inlet baseline with adapter kit for `15A` / `20A` hookups.
- AC input protection: dedicated hardwired-EMS + AC-in DIN enclosure + `30A` AC input breaker/disconnect upstream of MultiPlus AC-in.
- AC-out-1 distribution: two protected branches (`20A` galley, `15A` office) with GFCI-at-first-outlet strategy.
- Receptacle plan: `4` total `120V` receptacle locations (`2` galley, `2` office).
- USB charging plan: `2` DC-fed USB PD station assemblies on `12V` branches (`1` office, `1` galley) with branch baselines of `20A` (office) and `15A` (galley).

- AC-out-2 remains reserve-only in Phase 1 (labeled capped route; no energized branch hardware procured).

Monitoring and Control Topology

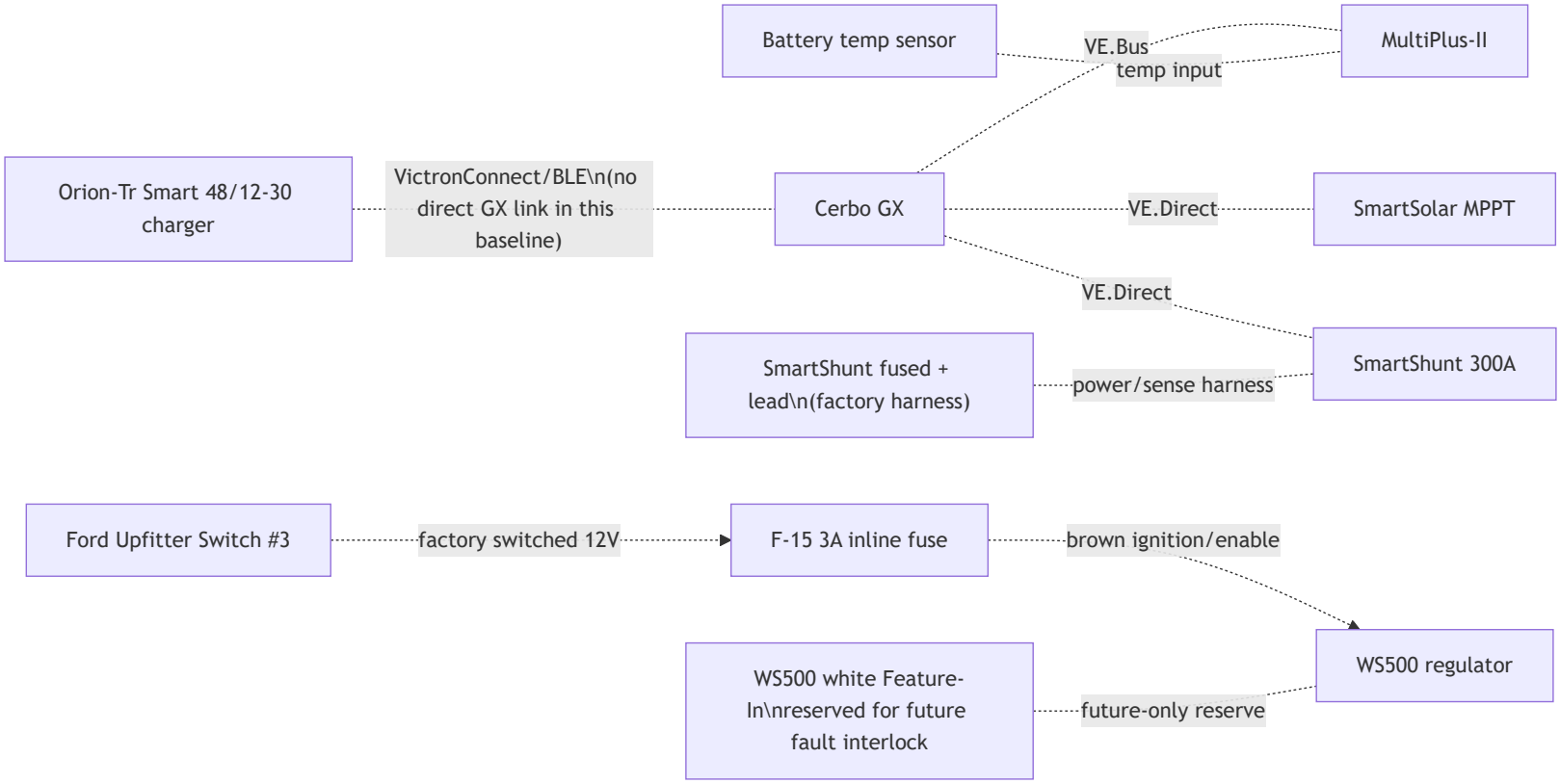

Fuse and Switch Housing Map (Where Each Item Is Physically Housed)

Item ID	Item value/type	Housing method	Location
`F-01A`	`200A Class T` (provisional)	Blue Sea Class T fuse block (`110A-200A` family)	Battery compartment near Battery A +
`F-01B`	`200A Class T` (provisional)	Blue Sea Class T fuse block (`110A-200A` family)	Battery compartment near Battery B +
`F-01C`	`200A Class T` (provisional)	Blue Sea Class T fuse block (`110A-200A` family)	Battery compartment near Battery C +
`F-02`	`125A MEGA`	Lynx integrated slot holder	Lynx Slot 1
`F-03`	`60A MEGA`	Lynx integrated slot holder	Lynx Slot 2
`F-04`	`150A MEGA`	Lynx integrated slot holder	Lynx Slot 3 (dedicated alternator branch)
`F-05`	`40A MEGA`	Lynx integrated slot holder	Lynx Slot 4
`F-06`	`30A` MIDI (`58V`)	Littelfuse `04980921GXM5` inline sealed holder (`58VDC`)	Electrical cabinet near Orion branch source
`F-07`	`60A MEGA` (`58V` class)	Victron MEGA fuse holder	Electrical cabinet at Orion `12V +` source end
`F-09A/B/C`	`15A gPV` each	`10x38` touch-safe fuse holders in PV combiner	Roof-entry combiner enclosure
`F-10`	Per branch (`ATO/ATC`)	Integrated blade sockets in generic 12V fuse block	Electrical cabinet
`F-11`	`100A` class (12V buffer battery main)	Sealed inline MIDI/AMI/ANL holder	Within ~`7"` of 12V buffer battery positive post

F-12	10A/15A WS500 power lead fuse	Sealed inline ATC/ATO holder	Near WS500 power lead source
F-13	3A WS500 battery-sense fuse	Sealed inline ATC/ATO holder	Near WS500 battery-sense source
F-14	5A WS500 current-sense fuse (as required)	Sealed inline ATC/ATO holder	Near shunt/sense source point
F-15	3A WS500 ignition/enable control fuse	Sealed inline ATC/ATO holder	Near Ford upfitter blunt-cut wire / WS500 control-wire handoff
SW-12V-BATT	Manual battery disconnect switch	Sealed rotary DC switch body	Electrical cabinet near 12V fuse-block main + stud for service access
OEM-SHUNT	Factory low-current inline fuse (SmartShunt harness)	Integrated inline holder in Victron harness lead	Electrical cabinet near Lynx positive tap

Retired from active architecture:

- `F-08` legacy Sterling engine-bay input fuse path.

Conductor Schedule (Start-to-Finish)

Segment ID	Circuit segment	Nominal voltage	Current basis	Overcurrent protection	Planned wire gauge	Estimated one-way length (this pass)
C-01	Battery A + -> F-01A	48V	Battery branch, fuse-limited	F-01A 200A provisional	2/0 AWG	2.5 ft (ASSUMED, equal-length set)
C-02	Battery B + -> F-01B	48V	Battery branch, fuse-limited	F-01B 200A provisional	2/0 AWG	2.5 ft (ASSUMED, equal-length set)
C-02C	Battery C + -> F-01C	48V	Battery branch, fuse-limited	F-01C 200A provisional	2/0 AWG	2.5 ft (ASSUMED, equal-length set)
C-03	Class T outputs -> battery-side 48V + busbar -> disconnect input	48V	Combined trunk current	F-01A/B/C	2/0 AWG each branch	2.5 ft each branch (ASSUMED, 4 conductors in rollup)
C-04	Disconnect output -> Lynx + bus	48V	Aggregate discharge design current (165A = F-02 125A + F-05 40A; 265A Lynx fuse sum is non-concurrent theoretical)	Upstream Class T fuses	2/0 AWG	2.5 ft (ASSUMED)
C-05	Battery negatives -> battery-side 48V - busbar -> SmartShunt battery side	48V	Mixed-path rollup: 3x battery-negative branches at 82.5A design each + NEGBUS_TO_SHUNT trunk at 165A aggregate	N/A (main negative path)	2/0 AWG each branch	2.5 ft each branch (ASSUMED, 4 conductors in rollup)
C-06	SmartShunt load side -> Lynx - bus	48V	Aggregate return current	N/A	2/0 AWG	2.5 ft (ASSUMED)
C-06A	Lynx positive tap -> SmartShunt positive sense/power lead	48V	Shunt electronics supply (very low current)	Factory inline fuse in OEM harness	OEM harness lead	2.5 ft (ASSUMED)
C-07	Lynx Slot 1 (F-02) -> MultiPlus DC+	48V	Inverter branch, fuse-limited	F-02 125A	2/0 AWG (manual minimum AWG 1 on short runs)	2.5 ft (ASSUMED)
C-08	MultiPlus DC- -> Lynx - bus	48V	Inverter return current	F-02 protects paired positive	2/0 AWG	2.5 ft (ASSUMED)

C-09	MPPT BAT+ -> Lynx Slot 2 (F-03)	48V	Controller output (45A max)	F-03 60A	6 AWG	2.5 ft (ASSUMED)
C-10	MPPT BAT- -> Lynx - bus	48V	Controller return current	F-03 protects paired positive	6 AWG	2.5 ft (ASSUMED)
C-11	Secondary alternator B+ -> APM-48 -> Lynx Slot 3 (F-04)	48V	Alternator branch design current	F-04 150A	2/0 AWG	20 ft (ASSUMED, one-way)
C-12	Secondary alternator B- -> Lynx - bus (dedicated return)	48V	Alternator branch return current	F-04 paired	2/0 AWG	20 ft (ASSUMED, one-way)
C-13	Lynx Slot 4 (F-05) -> F-06 holder	48V	Orion branch feeder, fuse-limited	F-05 40A	6 AWG	2.5 ft (ASSUMED)
C-14	F-06 -> Orion 48V + input	48V	Orion input, fuse-limited	F-06 30A MIDI	6 AWG planned (8 AWG minimum per Orion table)	2.5 ft (ASSUMED)
C-15	Orion 48V - input -> Lynx - bus	48V	Orion input return current	F-06 protects paired positive	6 AWG	2.5 ft (ASSUMED)
C-16	Legacy Sterling input + path (F-08)	12V	Retired path	Retired (F-08)	N/A	N/A (legacy only)
C-17	Legacy Sterling input - return path	12V	Retired path	Retired (F-08 paired)	N/A	N/A (legacy only)
C-18	Orion 12V + -> F-07 -> 12V fuse block main + stud	12V	Charger output path (30A continuous, 60A fuse)	F-07 60A	6 AWG planned (8 AWG minimum per Orion table)	2.5 ft (ASSUMED)
C-19	Orion 12V - -> 12V fuse block integrated - bus / main - stud	12V	Charger output return	F-07 protects paired positive	6 AWG	2.5 ft (ASSUMED)
C-19A	12V buffer battery + -> F-11 -> SW-12V-BATT -> 12V fuse block main + stud	12V	Buffer source path and service isolation path	F-11 100A class	4 AWG planned	2.5 ft (ASSUMED)
C-19B	12V buffer battery - -> 12V fuse block integrated - bus / main - stud	12V	Buffer battery return path	N/A (paired with C-19A)	4 AWG planned	2.5 ft (ASSUMED)
C-20	12V panel -> Starlink PSU	12V	Branch load	F-10 10A	14 AWG duplex	8 ft (ASSUMED, near-load branch)
C-21	12V panel -> Fridge	12V	Branch load	F-10 15A	14 AWG duplex	12 ft (ASSUMED, far-load branch)
C-22	12V panel -> Diesel heater	12V	Branch load	F-10 15A	14 AWG duplex	8 ft (ASSUMED, near-load branch)
C-23	12V panel -> Water pump	12V	Branch load	F-10 10A	14 AWG duplex	8 ft (ASSUMED, near-load branch)
C-24	12V panel -> CO + propane detector	12V	Branch load	F-10 3A	18/2	8 ft (ASSUMED, near-load branch)

C-25	12V panel -> LED lights + dimmer (Hiatus pre-installed)	12V	Branch load	F-10 5A	18/2	8 ft (ASSUMED, near-load branch)
C-26	12V panel -> Cerbo GX power feed	12V	Branch load (~3W)	F-10 3A (assumed)	18/2	2.5 ft (ASSUMED, cabinet internal)
C-27	PV strings -> F-09 combiner -> MPPT PV input	PV string voltage (3S)	String current + combiner output current	F-09A/B/C 15A each	10 AWG PV wire	12 ft trunk + 3x8 ft string legs (ASSUMED)
C-28	Shore inlet -> shore cord/adapter -> hardwired EMS -> AC-in DIN enclosure / AC input breaker	120VAC	Source-limited shore current (adapter-constrained at source)	30A AC input breaker/disconnect baseline with source-current-limit settings policy	10/3 shore feed to inlet/EMS/AC-in area	8 ft (ASSUMED)
C-29	AC input breaker/disconnect -> MultiPlus AC-in	120VAC	MultiPlus AC input current (30A hardware basis)	Upstream 30A AC breaker/disconnect (C-28)	10 AWG stranded AC conductors	2.5 ft (ASSUMED, cabinet internal)
C-30	MultiPlus AC-out-1 -> branch RCD/GFCI + breaker assembly	120VAC	Inverter-backed branch distribution current	UL943-class RCD/GFCI + branch breakers (20A galley, 15A office)	12 AWG stranded AC conductors	2.5 ft (ASSUMED, cabinet internal)
C-31	Branch A -> galley receptacle locations (2)	120VAC	Branch load (induction, microwave, galley outlets)	C-30 branch protection stack	12 AWG stranded AC conductors	15 ft (ASSUMED, branch leg default)
C-32	Branch B -> office receptacle locations (2)	120VAC	Branch load (monitor and office outlet use)	C-30 branch protection stack	12 AWG stranded AC conductors	15 ft (ASSUMED, branch leg default)
C-33	MultiPlus AC-out-2 (reserve-only) -> capped route for future shore-only branch	120VAC	N/A in Phase 1 (route reserved only)	N/A in Phase 1 (no energized branch hardware)	12 AWG stranded AC conductors (reserve path only)	15 ft (ASSUMED, reserve route default)
C-34	12V panel -> USB PD station branch (office zone)	12V	High-demand office charging branch (100W + 65W class station budget)	F-10 branch fuse (20A)	12 AWG duplex baseline	5 ft (ASSUMED, short-run requirement)
C-35	12V panel -> USB PD station branch (galley zone)	12V	Galley charging branch (65W class USB-C plus USB-A/C loads)	F-10 branch fuse (15A)	14 AWG duplex baseline	8 ft (ASSUMED, near-load branch)
C-36	12V panel -> Maxxair fan (Hiatus pre-installed)	12V	Roof ventilation branch	F-10 branch fuse (10A)	14 AWG duplex baseline	8 ft (ASSUMED, near-load branch)
C-37	12V panel -> DC ambient/cabinet LED strips (planned Govee)	12V	Branch load	F-10 branch fuse (5A)	18/2 baseline	8 ft (ASSUMED, near-load branch)
C-38	WS500 power lead source -> WS500 regulator input	12V origin lead	Regulator electronics feed	F-12 (10A baseline)	Harness lead	8 ft (ASSUMED)
C-39	WS500 battery positive-sense lead -> WS500	48V sense lead	Regulator voltage sense	F-13 (3A)	Harness lead	8 ft (ASSUMED)
C-40	WS500 current-sense lead path (if required by selected shunt layout)	low-current sense	Regulator current feedback	F-14 (5A as required)	Harness lead	8 ft (ASSUMED)

C-41	Ford Upfitter #3 output -> F-15 -> WS500 brown ignition/enable wire	12V control lead	Manual alternator-enable signal only	F-15 (3A)	16 AWG TXL/GXL	6 ft (ASSUMED)

Wiring Validation Worksheet (Estimate Pass, 2026-02-18)

Calculation basis for drop screening:

1. `V_drop = I * (2 * L_one_way * R_per_ft)`
2. Resistance basis used in this pass (`ohm/ft`): `2/0=0.0000779` , `6 AWG=0.0003951` , `4 AWG=0.0002485` , `12 AWG=0.001588` , `14 AWG=0.002525` , `18/2=0.006385` , `10 AWG=0.000999` .
3. Design targets: `<=2%` on major `48V` trunks, `<=3%` on planned `12V` /AC branches.
4. `C-05` is a rollup row that includes both branch and trunk return paths; voltage-drop screen shown is the conservative worst-case (`165A`) within that rollup.

Circuit ID	From	To	Fuse	Current basis	Gauge	Estimated one-way length	Voltage drop %	BOM gauge bucket	Status
C-01	Battery A +	F-01A	F-01A 200A	77.5A design branch share	2/0 AWG	2.5 ft	0.06% @ 51.2V	Row 28 (2/0 red)	PASS
C-02	Battery B +	F-01B	F-01B 200A	77.5A design branch share	2/0 AWG	2.5 ft	0.06% @ 51.2V	Row 28 (2/0 red)	PASS
C-02C	Battery C +	F-01C	F-01C 200A	77.5A design branch share	2/0 AWG	2.5 ft	0.06% @ 51.2V	Row 28 (2/0 red)	PASS
C-03	Class T load studs	48V + bus / disconnect input	F-01A/B/C	77.5A per branch	2/0 AWG	2.5 ft each (x4 conductors)	0.06% @ 51.2V	Row 28 (2/0 red)	PASS
C-04	Disconnect output	Lynx + bus	Upstream Class T	165A aggregate	2/0 AWG	2.5 ft	0.13% @ 51.2V	Row 28 (2/0 red)	PASS
C-05	Battery - branches	SmartShunt battery side via 48V - bus	N/A	82.5A per battery-negative branch; row rollup also includes one 165A trunk (NEGBUS_TO_SHUNT)	2/0 AWG	2.5 ft each (x4 conductors)	0.13% @ 51.2V (worst-case rollup)	Row 28 (2/0 black)	PASS
C-06	SmartShunt load side	Lynx - bus	N/A	165A aggregate return	2/0 AWG	2.5 ft	0.13% @ 51.2V	Row 28 (2/0 black)	PASS
C-06A	Lynx positive tap	SmartShunt sense/power lead	OEM inline fuse	OEM harness current	OEM harness	2.5 ft	N/A (low-current OEM lead)	Row 23 (kit harness)	PASS
C-07	Lynx Slot 1 DC+	MultiPlus DC+	F-02 125A	125A	2/0 AWG	2.5 ft	0.10% @ 51.2V	Row 28 (2/0 red)	PASS
C-08	MultiPlus DC-	Lynx - bus	F-02 paired	125A	2/0 AWG	2.5 ft	0.10% @ 51.2V	Row 28 (2/0 black)	PASS
C-09	MPPT BAT+	Lynx Slot 2	F-03 60A	45A	6 AWG	2.5 ft	0.17% @ 51.2V	Row 29 (6 AWG red)	PASS
C-10	MPPT BAT-	Lynx - bus	F-03 paired	45A	6 AWG	2.5 ft	0.17% @ 51.2V	Row 29 (6 AWG black)	PASS

C-11	Secondary alternator B+	Lynx Slot 3 via APM-48	F-04 150A	150A design	2/0 AWG	20 ft	0.80% @ 58.4V	Row 28 (2/0 red)	PASS
C-12	Secondary alternator B-	Lynx - bus (dedicated return)	F-04 paired	150A design	2/0 AWG	20 ft	0.80% @ 58.4V	Row 28 (2/0 black)	PASS
C-13	Lynx Slot 4	F-06 source side	F-05 40A	40A	6 AWG	2.5 ft	0.15% @ 51.2V	Row 29 (6 AWG red)	PASS
C-14	F-06 load side	Orion 48V +	F-06 30A MIDI	30A	6 AWG	2.5 ft	0.12% @ 51.2V	Row 29 (6 AWG red)	PASS
C-15	Orion 48V -	Lynx - bus	F-06 paired	30A	6 AWG	2.5 ft	0.12% @ 51.2V	Row 29 (6 AWG black)	PASS
C-16	Legacy Sterling input +	Legacy Sterling input +	Retired (F-08)	N/A	N/A	N/A	N/A	legacy only	RETIRED
C-17	Legacy Sterling input -	Legacy Sterling input -	Retired (F-08 paired)	N/A	N/A	N/A	N/A	legacy only	RETIRED
C-18	Orion 12V +	Fuse block main + stud	F-07 60A	30A	6 AWG	2.5 ft	0.49% @ 12V	Row 29 (6 AWG red)	PASS
C-19	Orion 12V -	Fuse block integrated - bus / main - stud	F-07 paired	30A	6 AWG	2.5 ft	0.49% @ 12V	Row 29 (6 AWG black)	PASS
C-19A	Buffer battery +	Fuse block main + stud (via F-11/SW)	F-11 100A	50A design	4 AWG	2.5 ft	0.52% @ 12V	Row 30 (4 AWG red)	PASS
C-19B	Buffer battery -	Fuse block integrated - bus / main - stud	N/A	50A design	4 AWG	2.5 ft	0.52% @ 12V	Row 30 (4 AWG black)	PASS
C-20	12V fuse panel	Starlink PSU	F-10 10A	8A	14 AWG duplex	8 ft	2.69% @ 12V	Row 32 (14 AWG duplex)	PASS (near 3%)
C-21	12V fuse panel	Fridge	F-10 15A	7A	14 AWG duplex	12 ft	3.54% @ 12V	Row 32 (14 AWG duplex)	WARN (shorten run or move to 12 AWG)
C-22	12V fuse panel	Diesel heater	F-10 15A	10A startup screen	14 AWG duplex	8 ft	3.37% @ 12V	Row 32 (14 AWG duplex)	WARN (startup drop margin tight)
C-23	12V fuse panel	Water pump	F-10 10A	7A	14 AWG duplex	8 ft	2.36% @ 12V	Row 32 (14 AWG duplex)	PASS
C-24	12V fuse panel	CO+propane detector	F-10 3A	0.2A	18/2	8 ft	0.17% @ 12V	Row 33 (18/2)	PASS
C-25	12V fuse panel	LED lights + dimmer (Hiatus pre-installed)	F-10 5A	5A	18/2	8 ft	4.26% @ 12V	Row 33 (18/2)	WARN (18/2 only if shorter run/lower current)

C-26	12V fuse panel	Cerbo GX feed	F-10 3A	0.3A	18/2	2.5 ft	0.08% @ 12V	Row 33 (18/2)	PASS
C-27	PV strings/combiner	MPPT PV input	F-09A/B/C 15A	30A trunk screen	10 AWG PV	12 ft trunk + 3x8 ft string legs	0.72% @ 100V trunk screen	Row 31 (10 AWG pair-equivalent)	PASS (string leg lengths still ASSUMED)
C-28	Shore inlet/EMS path	AC input breaker/disconnect	Source-limited AC OCP	30A hardware basis	10/3	8 ft	0.40% @ 120VAC	Row 114 (10/3 shore + AC-in feed)	PASS
C-29	AC input breaker/disconnect	MultiPlus AC-in	Upstream AC OCP	30A hardware basis	10 AWG AC	2.5 ft	0.12% @ 120VAC	Row 114 (10/3 shore + AC-in feed)	PASS
C-30	MultiPlus AC-out-1	Branch RCD/GFCI+breaker assembly	Branch OCP stack	20A	12 AWG AC	2.5 ft	0.13% @ 120VAC	Row 113 (12 AWG AC branch)	PASS
C-31	Branch A	Galley receptacle chain	20A branch OCP	20A	12 AWG AC	15 ft	0.79% @ 120VAC	Row 113 (12 AWG AC branch)	PASS
C-32	Branch B	Office receptacle chain	15A branch OCP	15A	12 AWG AC	15 ft	0.60% @ 120VAC	Row 113 (12 AWG AC branch)	PASS
C-33	MultiPlus AC-out-2	Reserve-only capped route	N/A in Phase 1	N/A	12 AWG AC (reserve path only)	15 ft	0.60% @ 120VAC (future-use screen)	N/A (not procured in Phase 1)	RESERVE
C-34	12V fuse panel	Office USB PD station	F-10 20A	20A design cap	12 AWG duplex	5 ft	2.65% @ 12V	Row 116 (12 AWG + 14 AWG USB set)	PASS (keep <=5 ft or upsize)
C-35	12V fuse panel	Galley USB PD station	F-10 15A	8A expected	14 AWG duplex	8 ft	2.69% @ 12V	Row 116 (12 AWG + 14 AWG USB set)	PASS (near 3%; if sustained current rises, move to 12 AWG)
C-36	12V fuse panel	Maxxair fan (Hiatus pre-installed)	F-10 10A	4A expected	14 AWG duplex	8 ft	1.35% @ 12V	Row 32 (14 AWG duplex)	PASS
C-37	12V fuse panel	DC ambient/cabinet LED strips (planned Govee)	F-10 5A	5A design cap	18/2	8 ft	4.26% @ 12V	Row 33 (18/2)	WARN (18/2 only if shorter run/lower current)
C-38	WS500 power lead source	WS500 regulator input	F-12 10A	low-current electronics feed	Harness lead	8 ft	N/A (harness-limited)	Row 171 (fuse kit)	PASS

C-39	WS500 battery sense source	WS500 voltage-sense input	F-13 3A	low-current electronics sense	Harness lead	8 ft	N/A (harness-limited)	Row 171 (fuse kit)	PASS
C-40	WS500 current-sense source	WS500 current-sense input	F-14 5A (if required)	low-current electronics sense	Harness lead	8 ft	N/A (harness-limited)	Row 171 (fuse kit)	PASS
C-41	Ford Upfitter #3 output	WS500 brown ignition/enable input via F-15	F-15 3A	manual low-current control only	16 AWG TXL/GXL	6 ft	N/A (control circuit)	Row 176 (upfitter control kit)	PASS

Wire Rollup (No-Padding Purchase Baseline)

Gauge / cable family	Estimated total	Source circuits	BOM row
2/0 AWG red	42.5 ft	C-01, C-02, C-02C, C-03, C-04, C-07, C-11	28
2/0 AWG black	35.0 ft	C-05, C-06, C-08, C-12	28
6 AWG red	10.0 ft	C-09, C-13, C-14, C-18	29
6 AWG black	7.5 ft	C-10, C-15, C-19	29
4 AWG red	2.5 ft	C-19A	30
4 AWG black	2.5 ft	C-19B	30
10 AWG pair-equivalent (PV)	36 ft route (72 ft conductor equivalent)	C-27 (3x8 ft strings + 12 ft combiner trunk, ASSUMED)	31
14 AWG duplex	52 ft	C-20, C-21, C-22, C-23, C-35, C-36	32
18/2	26.5 ft	C-24, C-25, C-26, C-37	33
12 AWG AC branch cable	35 ft (C-33 excluded in Phase 1)	C-30 through C-32	113
10/3 shore + AC-in feed	11 ft	C-28, C-29	114
USB branch mix (12 AWG + 14 AWG)	5 ft (12 AWG) + 8 ft (14 AWG)	C-34, C-35	116
WS500 harness/sense leads	Included in selected kit/harness set	C-38, C-39, C-40	168, 171
16 AWG TXL/GXL control wire	6 ft	C-41	176

Notes:

1. This table is a base estimate only; it intentionally excludes order padding and termination waste.
2. Apply personal order overage at checkout based on actual spool cut increments and routing confidence.
3. Parallel bank balancing is locked: `C-01/C-02/C-02C` and battery-negative branches in `C-05` remain equal length.

3x Battery Bank Bench-Build Cut List (2/0 AWG)

Purpose: make the bench build orderable without needing final camper run lengths. Treat lengths below as *bench module* lengths only; final install harnesses should be re-cut after layout freeze.

Assumptions:

1. Battery terminals are `M8` (verify your battery stud size before ordering lugs).
2. Class T fuse blocks and battery-side busbars use `3/8"` studs (treat as `M10` lugs unless your specific hardware differs).
3. Lynx Distributor is the `M10` model (main connections `M10`; internal/fuse studs may still be `M8` depending on the position).

Cable ID	Qty	From -> To	Color	Gauge	Est. one-way length	Lug A	Lug B
BATT+_A/B/C	3	Battery + -> Class T block line side	red	2/0	2.5 ft each (ASSUMED)	M8	M10
FUSE_TO_POSBUS_A/B/C	3	Class T block load side -> 48V + busbar	red	2/0	2.5 ft each (ASSUMED)	M10	M10

POSBUS_TO_DISC	1	48V + busbar -> disconnect input	red	2/0	2.5 ft (ASSUMED)	M10	M10
DISC_TO_LYNX+	1	disconnect output -> Lynx + input	red	2/0	2.5 ft (ASSUMED)	M10	M10
BATT-_A/B/C	3	Battery - -> 48V - busbar	black	2/0	2.5 ft each (ASSUMED)	M8	M10
NEGBUS_TO_SHUNT	1	48V - busbar -> SmartShunt battery side	black	2/0	2.5 ft (ASSUMED)	M10	M10
SHUNT_TO_LYNX-	1	SmartShunt load side -> Lynx - input	black	2/0	2.5 ft (ASSUMED)	M10	M10
LYNX_SLOT1_TO_MULTI+	1	Lynx Slot 1 DC+ -> MultiPlus DC+	red	2/0	2.5 ft (ASSUMED)	M8	M8
LYNX_TO_MULTI-	1	Lynx - -> MultiPlus DC-	black	2/0	2.5 ft (ASSUMED)	M8	M8

Locked balancing rule for the `3x` parallel bank:

1. Keep `BATT+_A/B/C` equal length, same lug geometry, and same cable family.
2. Keep `BATT-_A/B/C` equal length, same lug geometry, and same cable family.
3. If an unavoidable routing offset appears in final install, log a warning and verify sharing with clamp-current checks under load and charge.

Torque reference (verify against your exact manuals/hardware):

- MultiPlus-II DC terminals: `12 Nm` (`M8` nut) per Victron installation guidance.
- SmartShunt shunt bolts: verify torque for the installed `300A` model per Victron installation guidance.
- Lynx Distributor `M10` model: `M10` nuts `33 Nm` (older serials may be lower), and `M8` nuts `14 Nm` per Victron Lynx installation guidance.

Additional Components Included In Topology Scope

- `48V` disconnect (`275A`)
- Pre-charge resistor (commissioning/soft-charge aid before connecting large DC loads)
- Battery-side `48V +` combine busbar (after Class T fuses)
- Battery-side `48V -` combine busbar (battery-only, before SmartShunt)
- 12V fuse block main `+` stud used as source-combine point (Orion + buffer battery feed)
- 12V fuse block integrated negative bus/main `-` used as shared return point
- 12V buffer battery main fuse (`F-11`) and manual disconnect switch (`SW-12V-BATT`)
- Shore AC inlet + cord/adapter interface hardware
- Hardwired EMS in shore path before AC-in breaker/disconnect
- Split AC-in and AC-out DIN enclosures with dedicated neutral/ground bars per enclosure
- AC branch RCD/GFCI + breaker hardware
- Receptacle boxes + `120V` outlets (`4` planned locations: `2` galley, `2` office)
- AC-out-2 reserve-only capped route (no energized Phase 1 branch hardware)
- USB PD station branch hardware (`2` stations: office + galley)
- Battery temperature sensor wiring to inverter/monitoring path
- SmartShunt fused positive sense/power lead (factory harness)
- Ford `Upfitter #3` control lead and local `F-15` inline fuse for the WS500 brown ignition/enable wire

Assumptions (Explicit)

1. Cable sizing assumes fine-strand copper conductors (OFC welding-cable baseline for high-current DC paths), enclosed vehicle routing, and the estimated one-way lengths listed in this document.
2. Voltage-drop design intent used here: `<=2%` on major `48V` power runs and `<=3%` on `12V` branch circuits.
3. `F-09` PV string fuse value (`15A`) remains provisional until final module datasheet max-series-fuse rating is confirmed.
4. Cerbo GX feed is assumed from the `12V` panel (`12V-07`) for branch-level serviceability.
5. Orion branch remains split-protection (`F-05` upstream feeder + `F-06` device-level input fuse).
6. No low-voltage-disconnect (LVD) automation is included in Phase 1; protection is source fusing plus manual `SW-12V-BATT` isolation.
7. Alternator architecture lock is dedicated `48V` secondary alternator path (`Mechman + WS500 + APM-48`) with `F-04 150A` ; legacy Sterling engine-bay path is retired.
8. `F-01A/B/C` are provisionally set to `200A` pending final `51.2V` battery datasheet/manual confirmation; if validated limits are lower, shift to `175A` .
9. `2/0` cable quantity planning baseline in this pass is `77.5 ft` total no-padding (`42.5 ft` red + `35.0 ft` black); user-applied order padding is intentionally deferred to checkout.
10. Manual alternator shutdown baseline is Ford `Upfitter #3` feeding the WS500 brown ignition/enable wire through `F-15` ; `WS500` white `Feature-In` remains a future-only reserve for automatic interlock work.

Completion Status

- DC/PV topology is complete for current BOM scope and load model scope.
- AC hierarchy is complete at architecture level, including transfer behavior, branch strategy, and protection chain.
- Full-circuit estimate pass is now documented with run lengths, voltage-drop screening, and purchase rollups.
- Remaining work is final measured-length replacement and SKU-level closeout before final cut-to-length harness production.