Nordic Semiconductor ASA

nRF9160 Development Kit (PCA10090)

Sheet 1: Connections
Sheet 2: nRF9160
Sheet 3: nRF52840
Sheet 4: Signal Switches
Sheet 5: Interface MCU
Sheet 6: Buttons and LEDs
Sheet 7: SIM & Connectors
Sheet 8: Power Supply

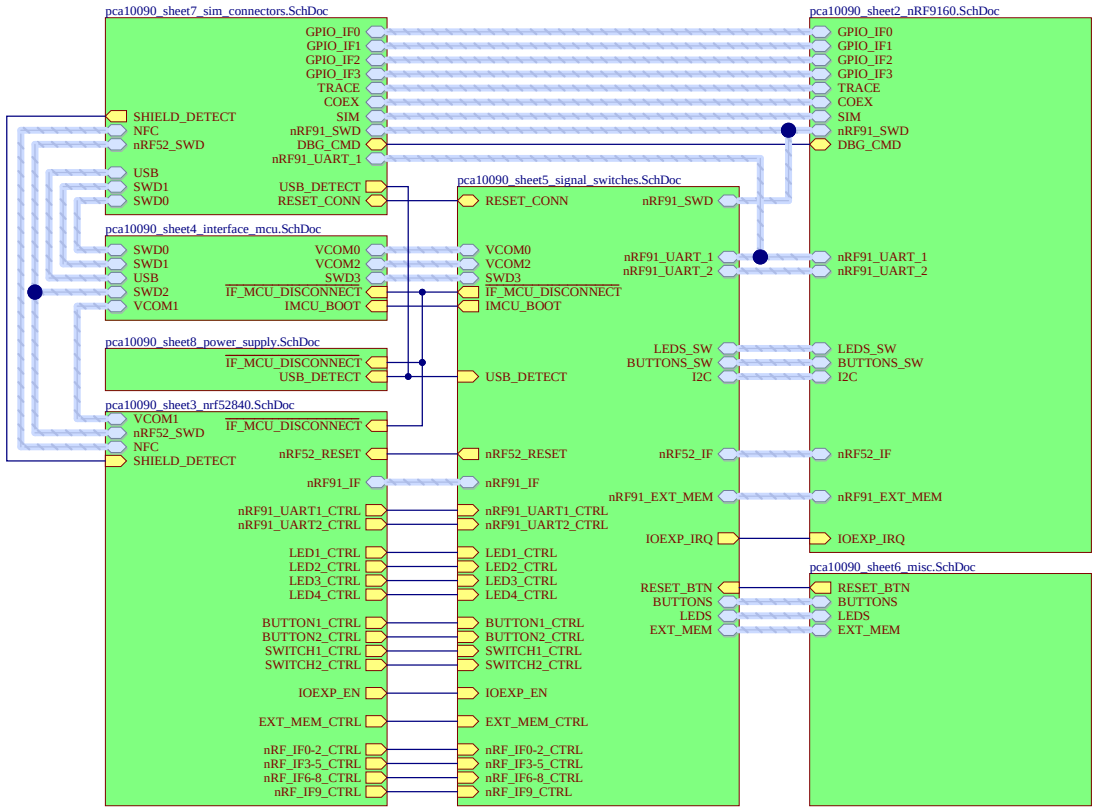

× The No ERC object is a design directive.
This directive is placed on a node in the circuit to suppress harmless warnings and/or error violation conditions that are detected when the schematic project is compiled.

Title: Connections		
Size: A3	PCB Assembly Number: PCA10090	Revision: 1.1.0
Date: 20.01.2022		Sheet 1 of 8
File: pca10090_sheet1_connections.SchDoc		Drawn By: RUBR

NORDIC SEMICONDUCTOR

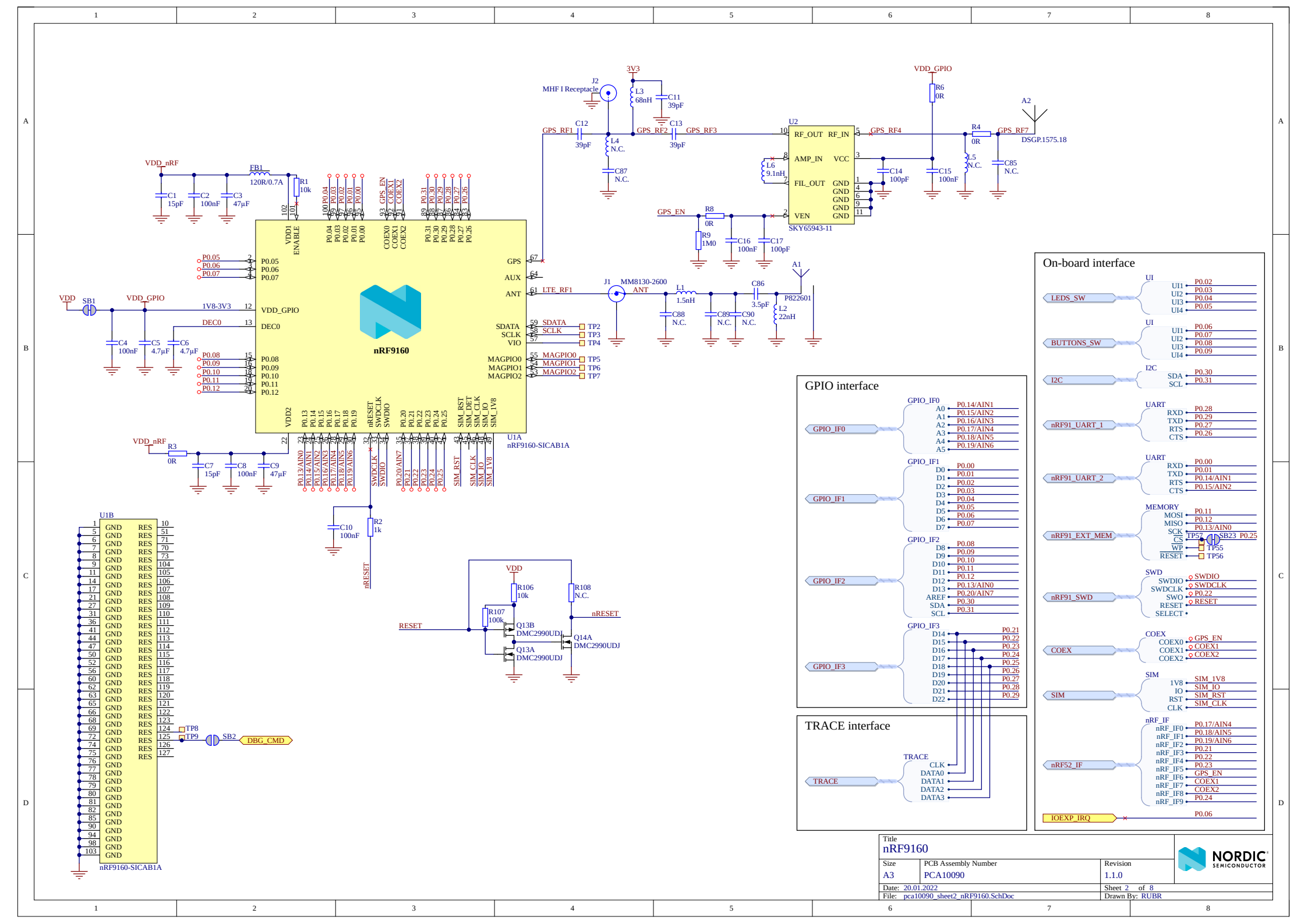
nRF9160
nRF9160-SICAB1A
SKY65943-11
MM8130-2600 ANT
P822601
DSGP.1575.18
On-board interface
GPIO interface
TRACE interface
LEDS_SW
BUTTONS_SW
I2C
nRF91_UART_1
nRF91_UART_2
nRF91_EXT_MEM
nRF91_SWD
COEX
SIM
nRF52_IF
IOEXP_IRQ
GPIO_IF0
GPIO_IF1
GPIO_IF2
GPIO_IF3
TRACE
DBG_CMD
Title
nRF9160
Size
A3
PCA10090
Revision
1.1.0
Date: 20.01.2022
Sheet 2 of 8
File: pca10090_sheet2_nRF9160.SchDoc
Drawn By: RUBR
NORDIC SEMICONDUCTOR

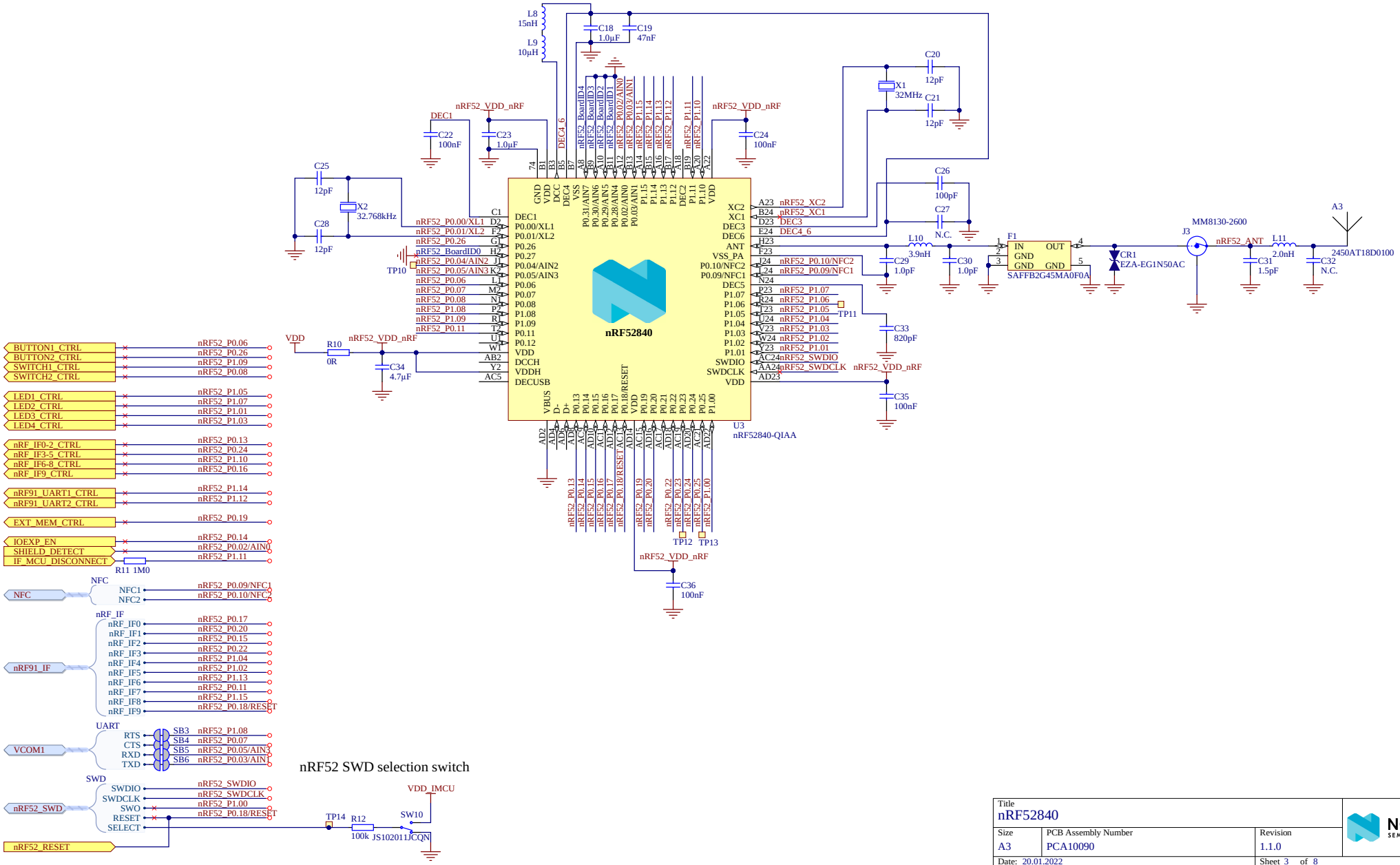

Title: nRF52840		
Size: A3	PCB Assembly Number: PCA10090	Revision: 1.1.0
Date: 20.01.2022		Sheet 3 of 8
File: pca10090_sheet3_nrf52840.SchDoc		Drawn By: RUBR

NORDIC SEMICONDUCTOR

SWD0/1 SEL reverse drive protection

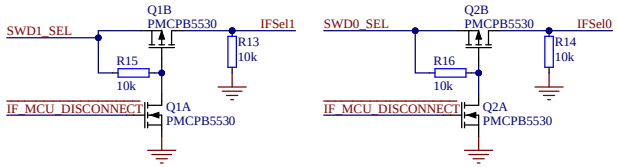

SWO MUX

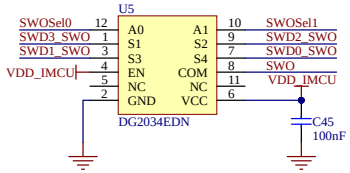

Interface MCU programming connector

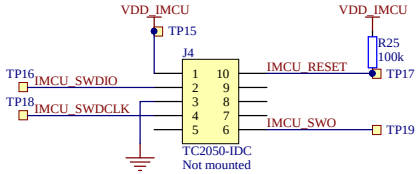

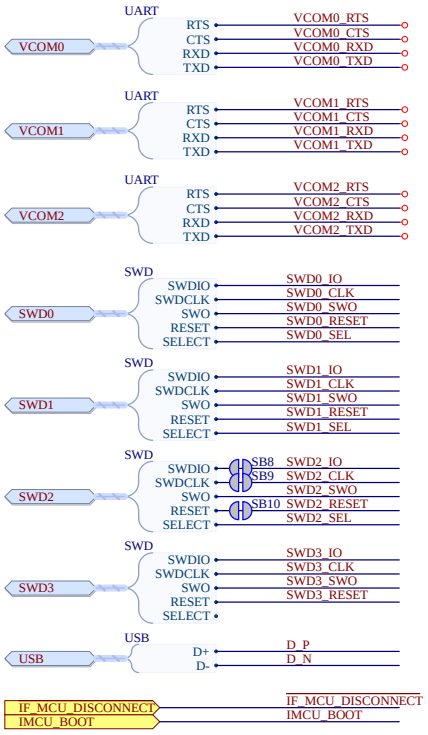

Interface MCU

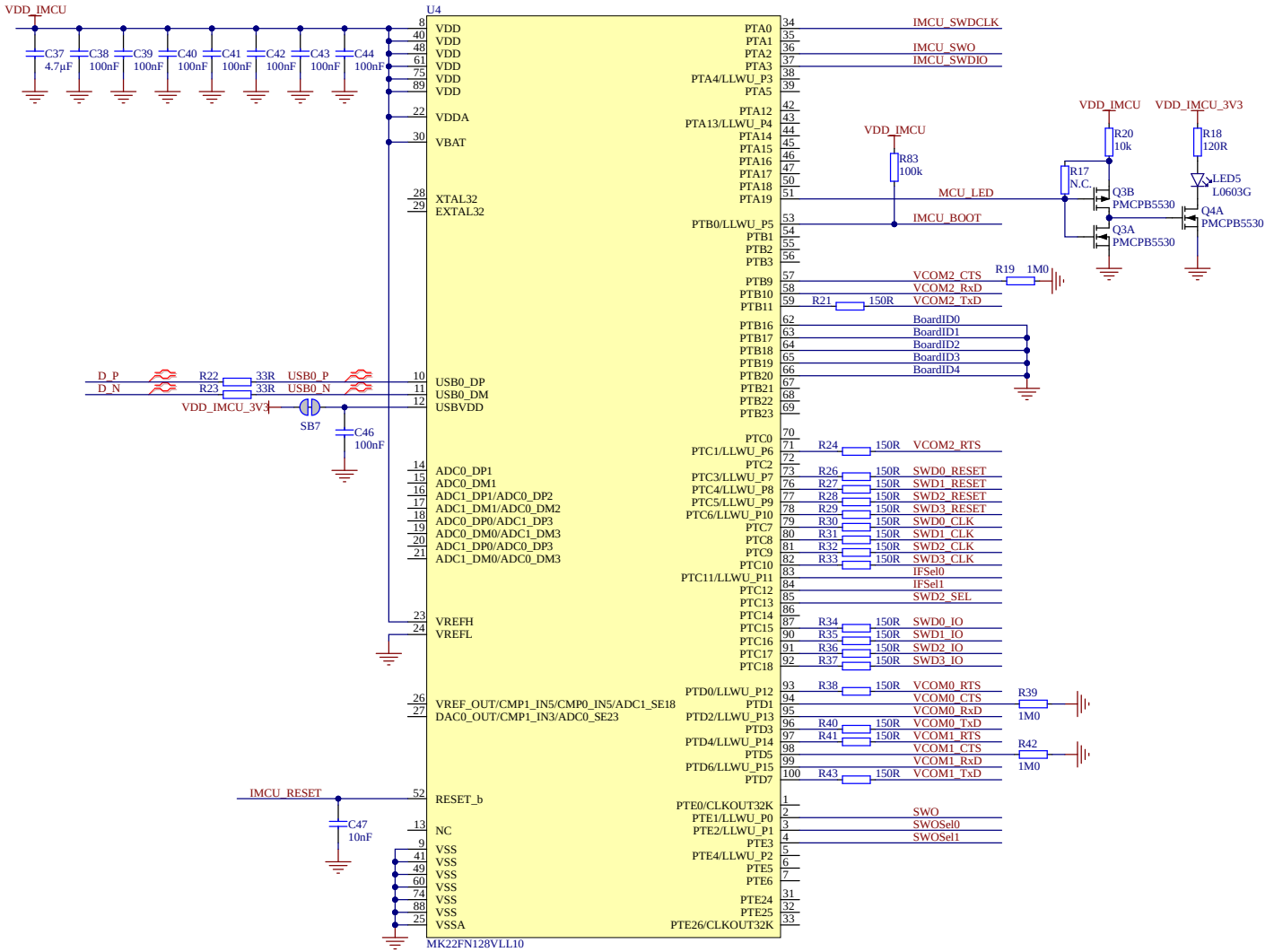

Title: Interface MCU		
Size: A3	PCB Assembly Number: PCA10090	Revision: 1.1.0
Date: 20.01.2022		Sheet 4 of 8
File: pca10090_sheet4_interface_mcu.SchDoc		Drawn By: RUBR

NORDIC SEMICONDUCTOR

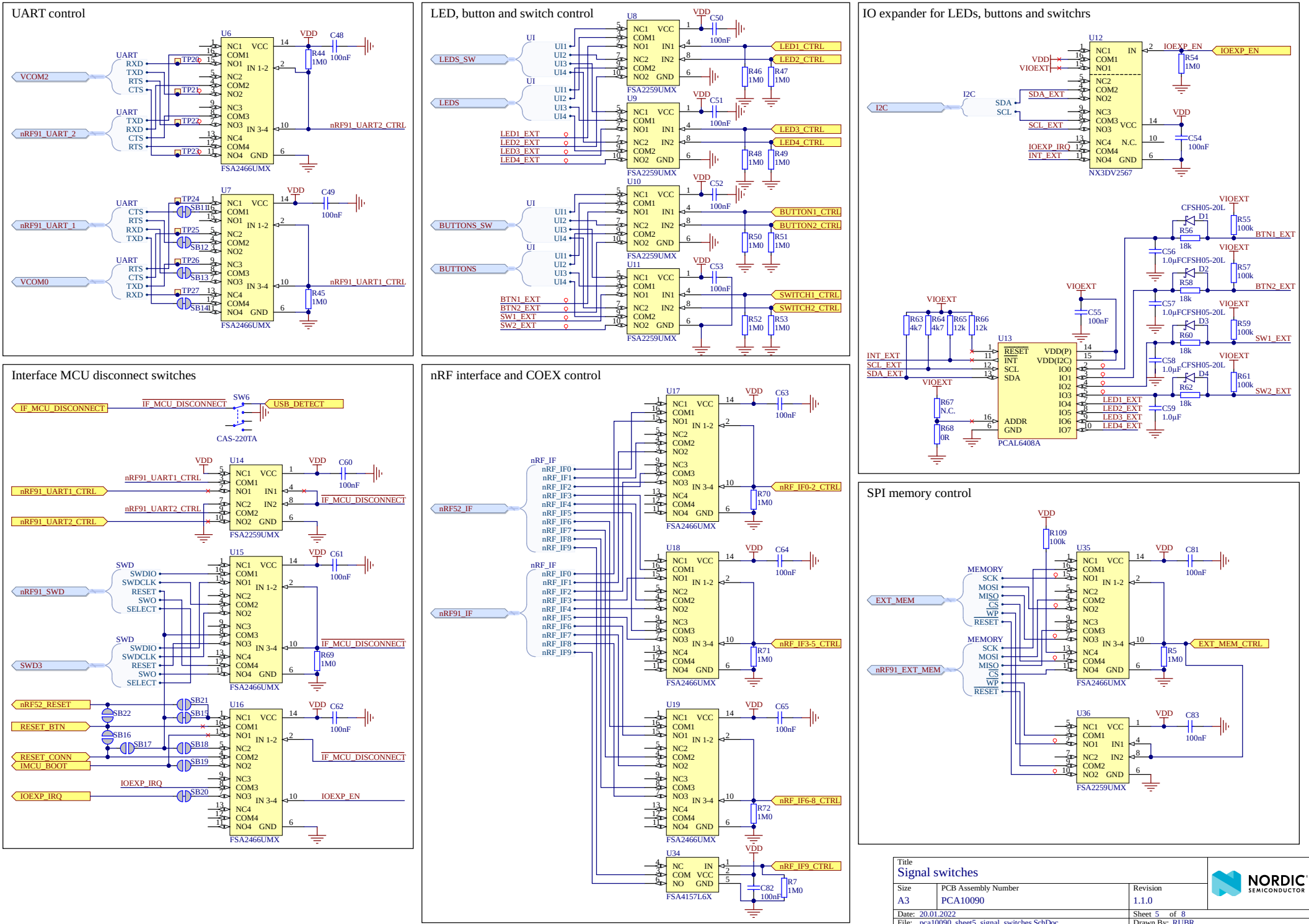
UART control
U6
U7
VCOM2
nRF91_UART_2
nRF91_UART_1
VCOM0
nRF91_UART2_CTRL
nRF91_UART1_CTRL
FSA2466UMX
LED, button and switch control
U8
U9
U10
U11
LEDS_SW
LEDS
BUTTONS_SW
BUTTONS
LED1_CTRL
LED2_CTRL
LED3_CTRL
LED4_CTRL
BUTTON1_CTRL
BUTTON2_CTRL
SWITCH1_CTRL
SWITCH2_CTRL
FSA2259UMX
IO expander for LEDs, buttons and switchrs
U12
NX3DV2567
U13
PCAL6408A
IOEXP_EN
BTN1_EXT
BTN2_EXT
SW1_EXT
SW2_EXT
Interface MCU disconnect switches
SW6
CAS-220TA
IF_MCU_DISCONNECT
USB_DETECT
U14
U15
U16
nRF91_SWD
SWD3
nRF52_RESET
RESET_BTN
RESET_CONN
IMCU_BOOT
IOEXP_IRQ
nRF interface and COEX control
U17
U18
U19
U34
nRF52_IF
nRF91_IF
nRF_IF0-2_CTRL
nRF_IF3-5_CTRL
nRF_IF6-8_CTRL
nRF_IF9_CTRL
FSA4157L6X
SPI memory control
U35
U36
EXT_MEM
nRF91_EXT_MEM
EXT_MEM_CTRL
Signal switches
A3
PCA10090
1.1.0
20.01.2022
pca10090_sheet5_signal_switches.SchDoc
Sheet 5 of 8
RUBR
NORDIC SEMICONDUCTOR

LEDs

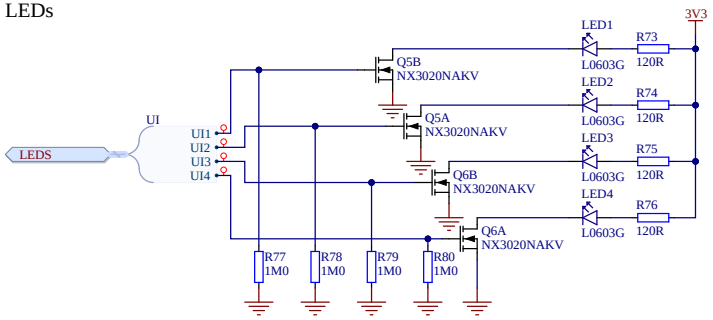

Buttons and slideswitches

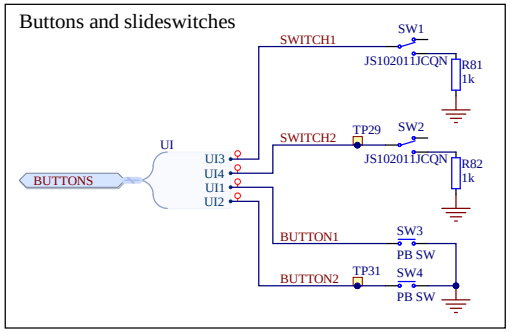

Reset button

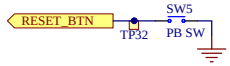

Flash memory

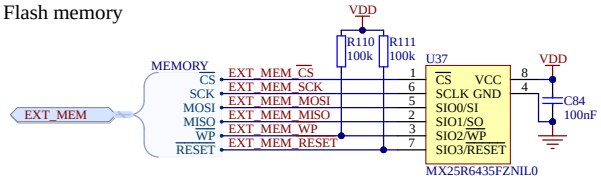

Title: Misc			
Size: A3	PCB Assembly Number: PCA10090	Revision: 1.1.0	
Date: 20.01.2022		Sheet 6 of 8	
File: pca10090_sheet6_misc.SchDoc		Drawn By: RUBR	

Interface connectors

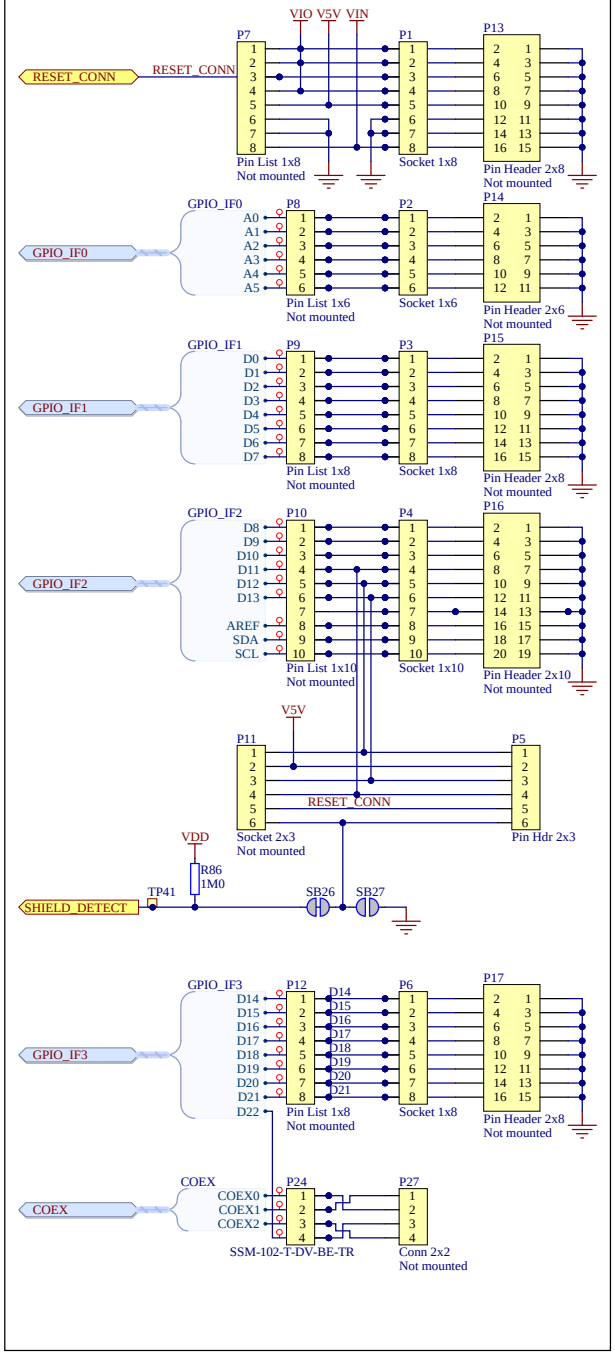

SIM card connector, eSIM and selection switch

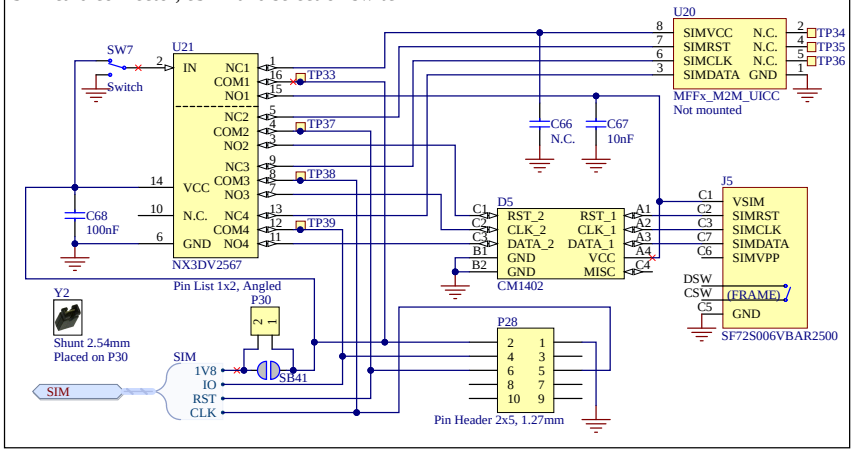

Shield debug and current measurement connector

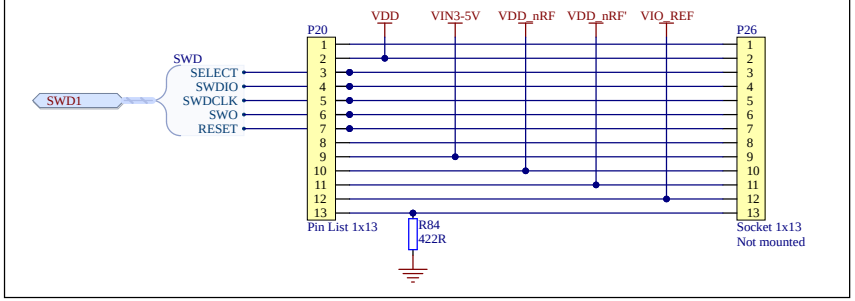

USB connector and USB detect

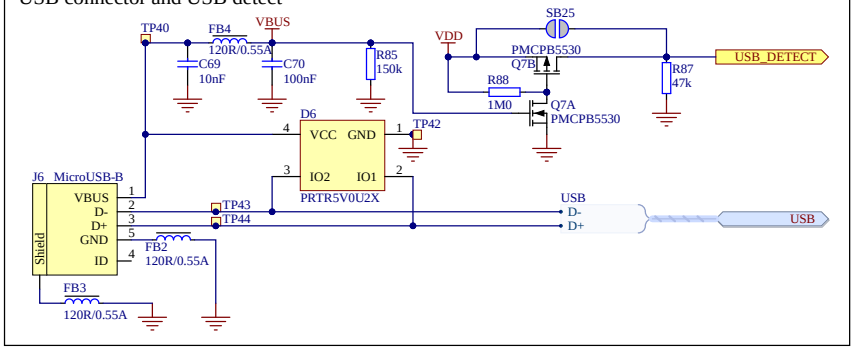

Optional NFC connector

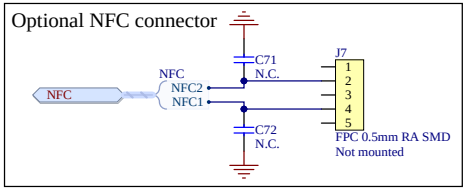

Debug OUT connector

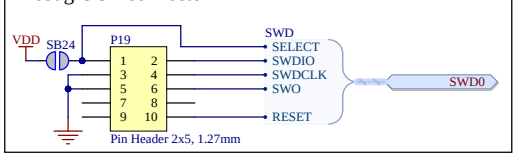

nRF52 debug IN connector

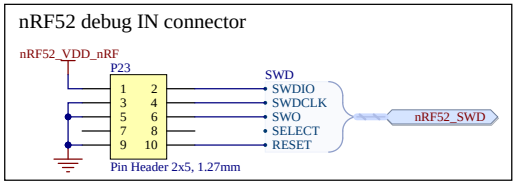

nRF91 debug IN connector

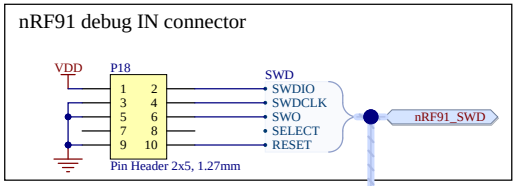

Trace connector

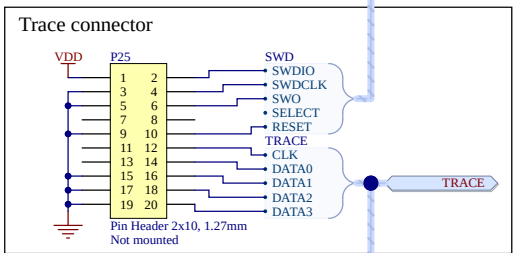

Nordic internal debugging interface

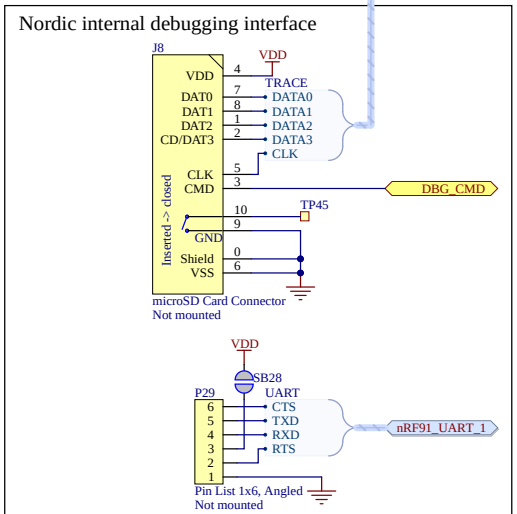

Title: SIM & Connectors		
Size: A3	PCB Assembly Number: PCA10090	Revision: 1.1.0
Date: 20.01.2022		Sheet 7 of 8
File: pca10090_sheet7_sim_connectors.SchDoc		Drawn By: RUBR

NORDIC SEMICONDUCTOR

Power sources and switches

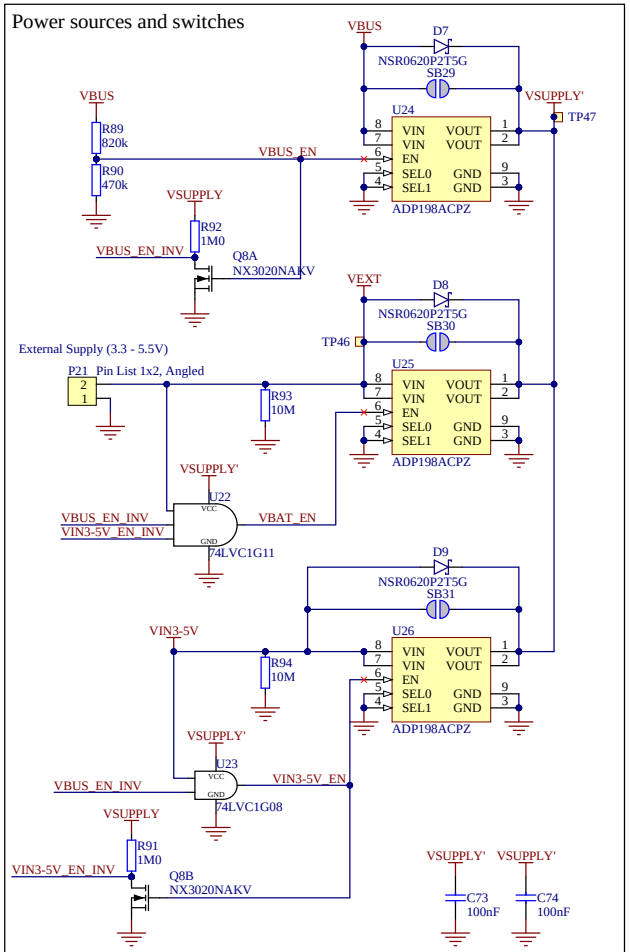

Buck regulator for VDD

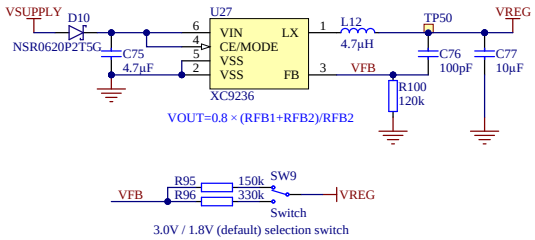

3V3 supply

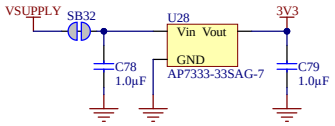

nRF91 current measurement

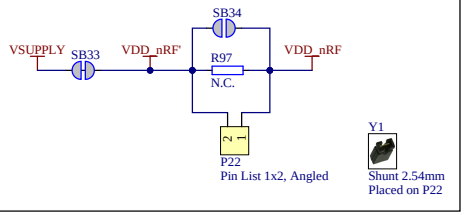

Power switch

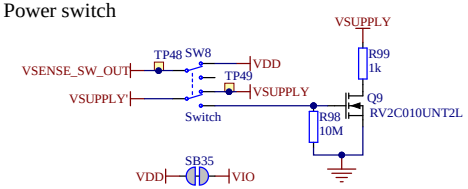

VIO_REF sense buffer and switch

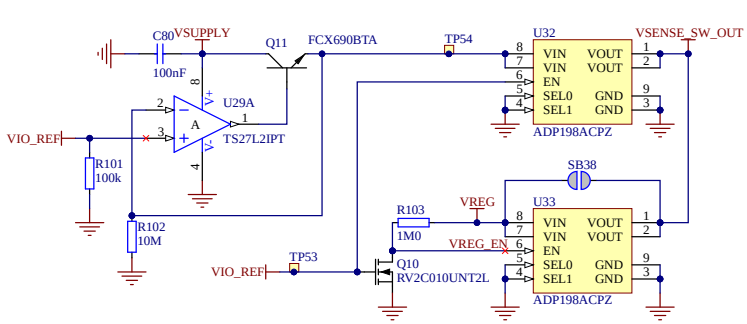

Interface MCU power switch

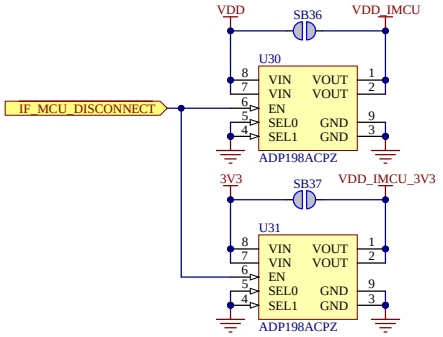

VSUPPLY & V5V interface

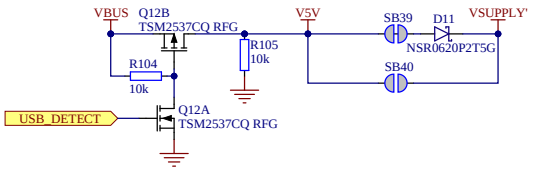

Instrument ground

TP51

Title: Power Supply		
Size: A3	PCB Assembly Number: PCA10090	Revision: 1.1.0
Date: 20.01.2022		Sheet 8 of 8
File: pca10090_sheet8_power_supply.SchDoc		Drawn By: RUBR

NORDIC SEMICONDUCTOR

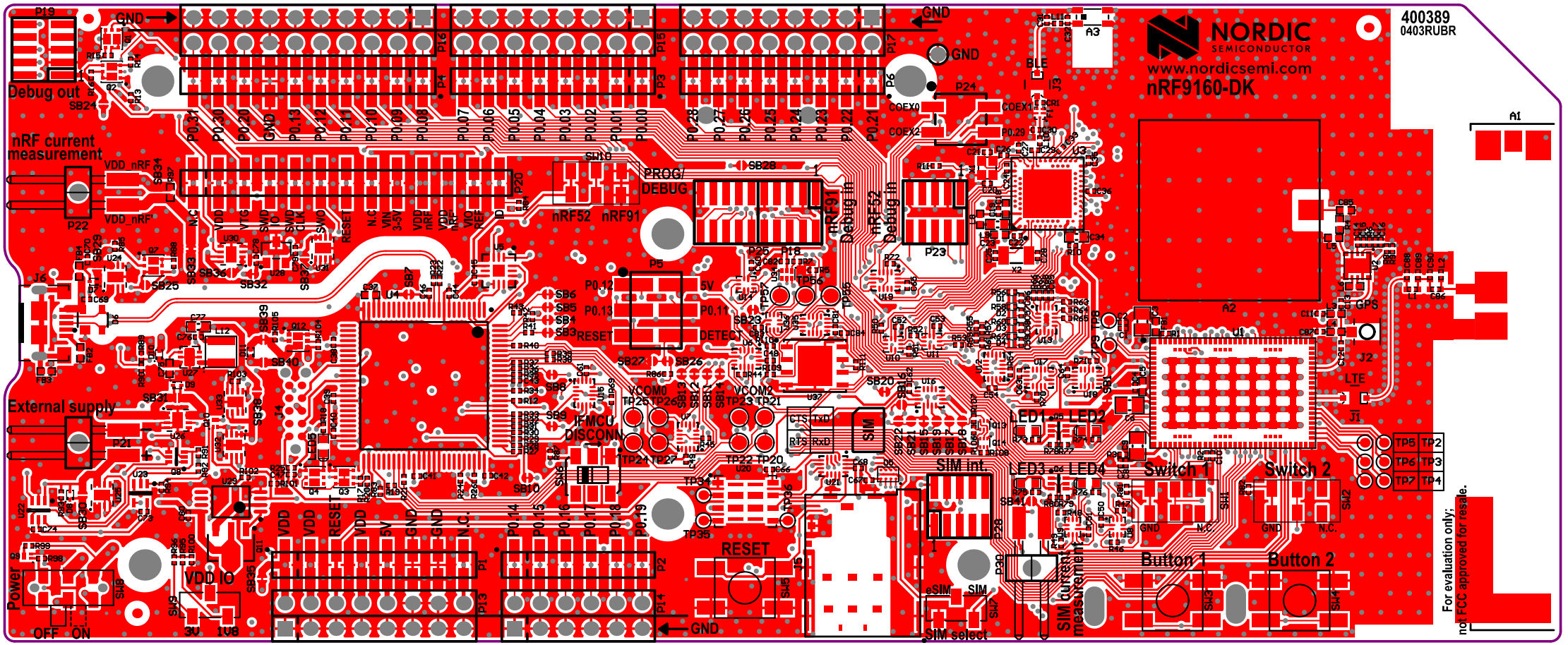
400389
0403RUBR
NORDIC SEMICONDUCTOR
www.nordicsemi.com
nRF9160-DK
Debug out
nRF current measurement
External supply
Power
OFF
ON
VDD IO
PROG/ DEBUG
nRF52
nRF91
Debug in
IFMCU DISCONN
RESET
SIM
SIM int.
eSIM
SIM select
SIM current measurement
LED1
LED2
LED3
LED4
Switch 1
Switch 2
Button 1
Button 2
BLE
GPS
LTE
For evaluation only; not FCC approved for resale.

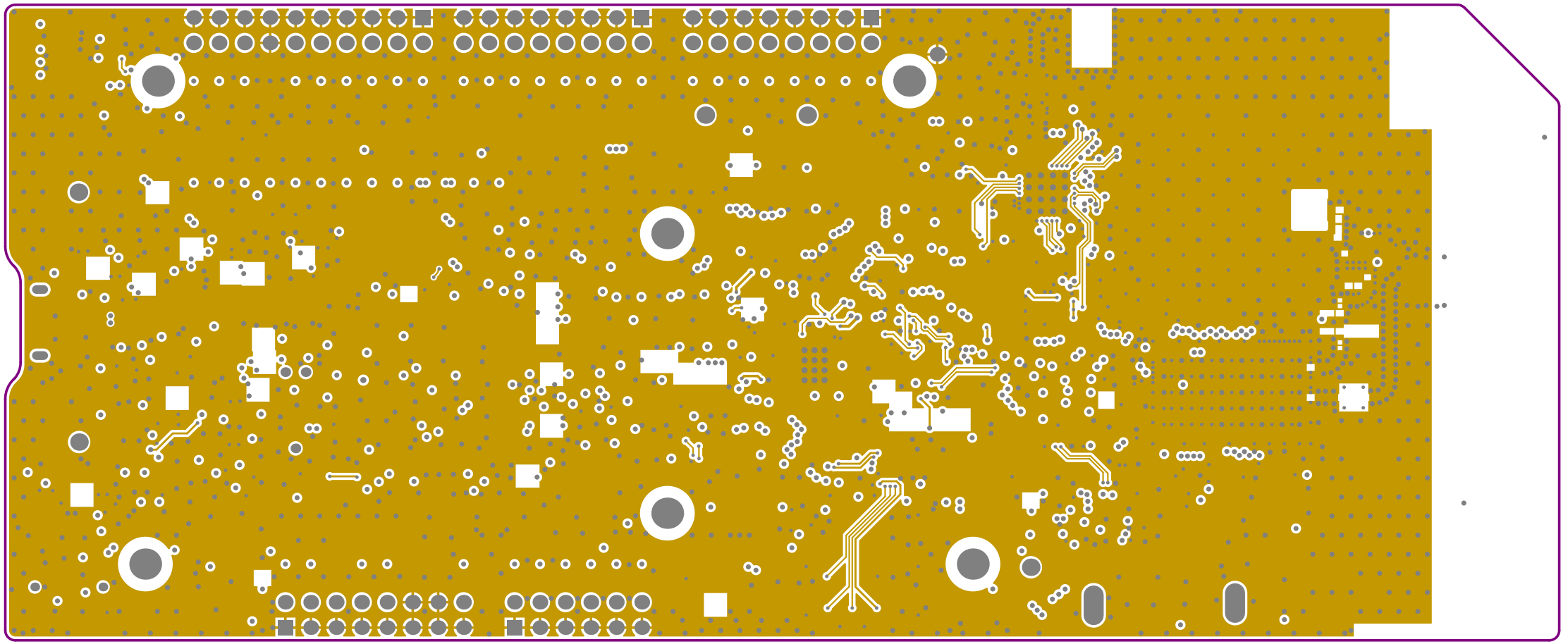

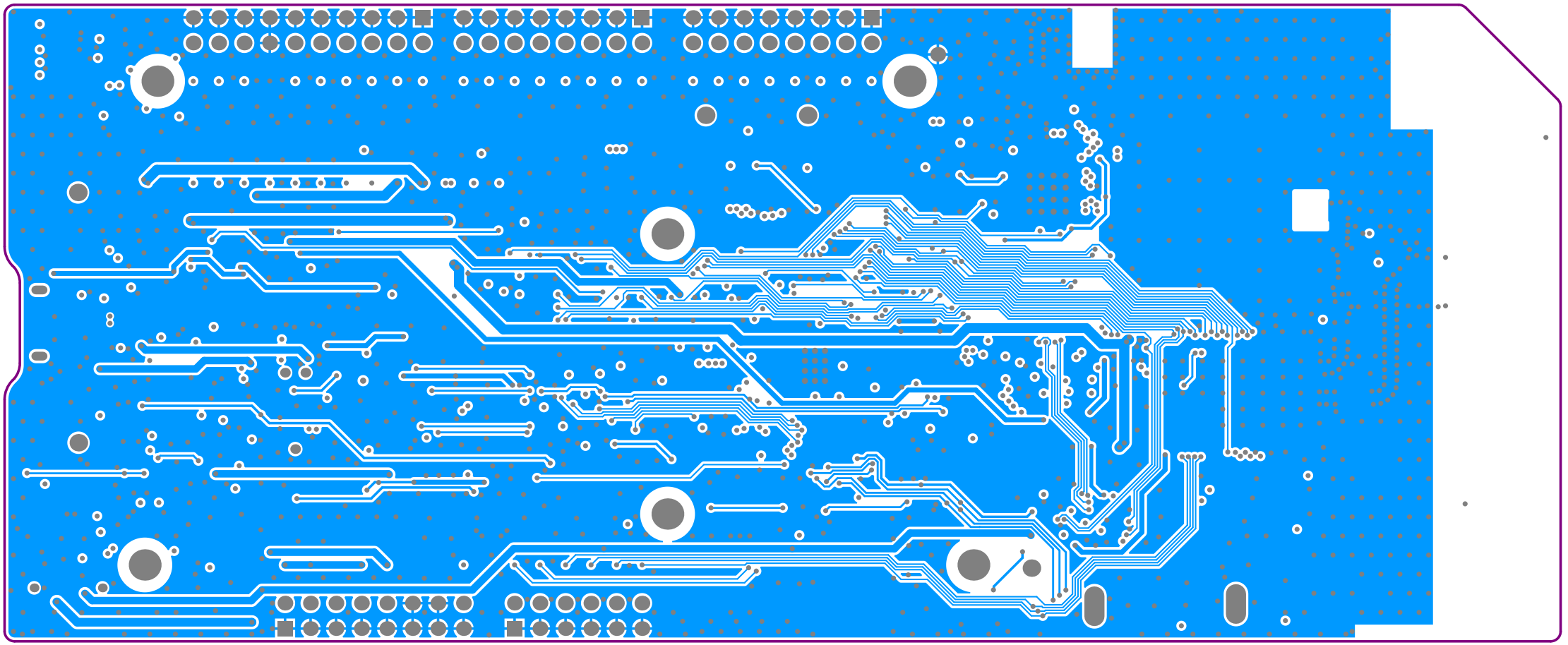

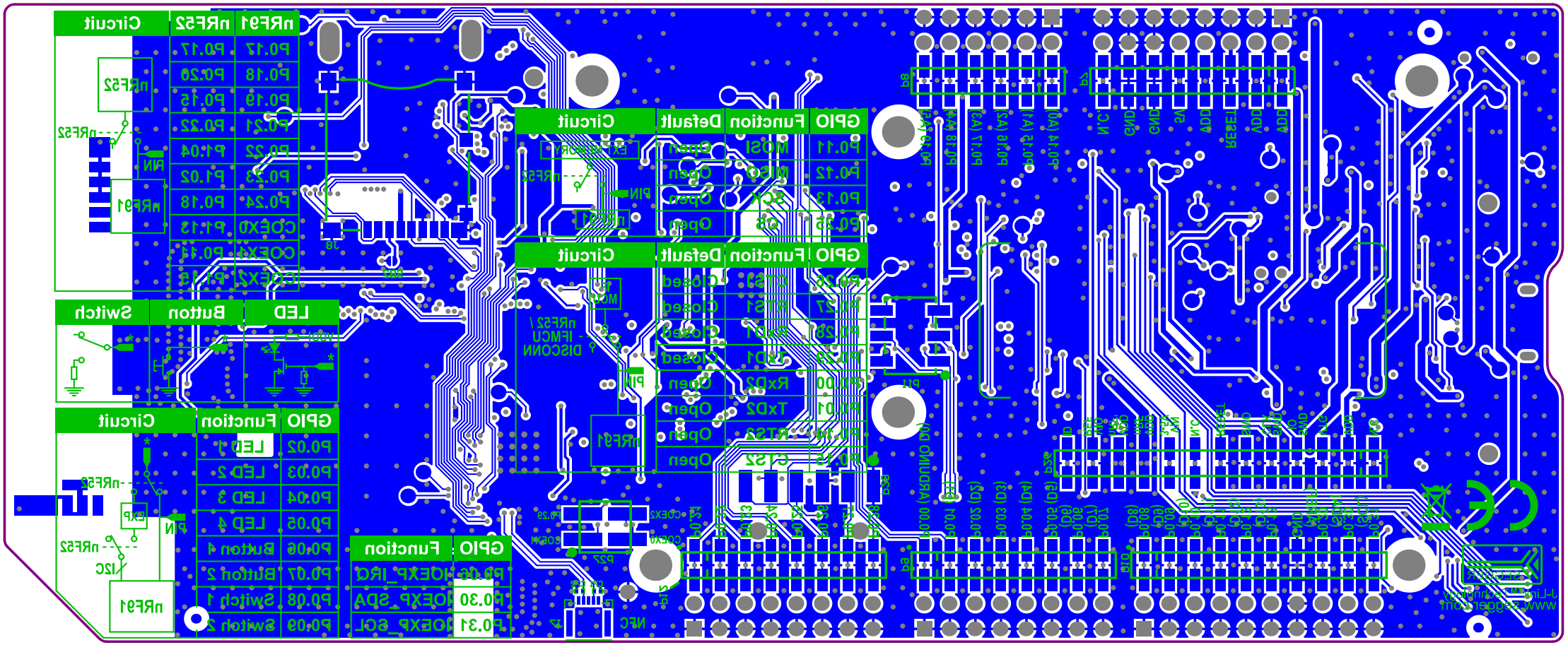

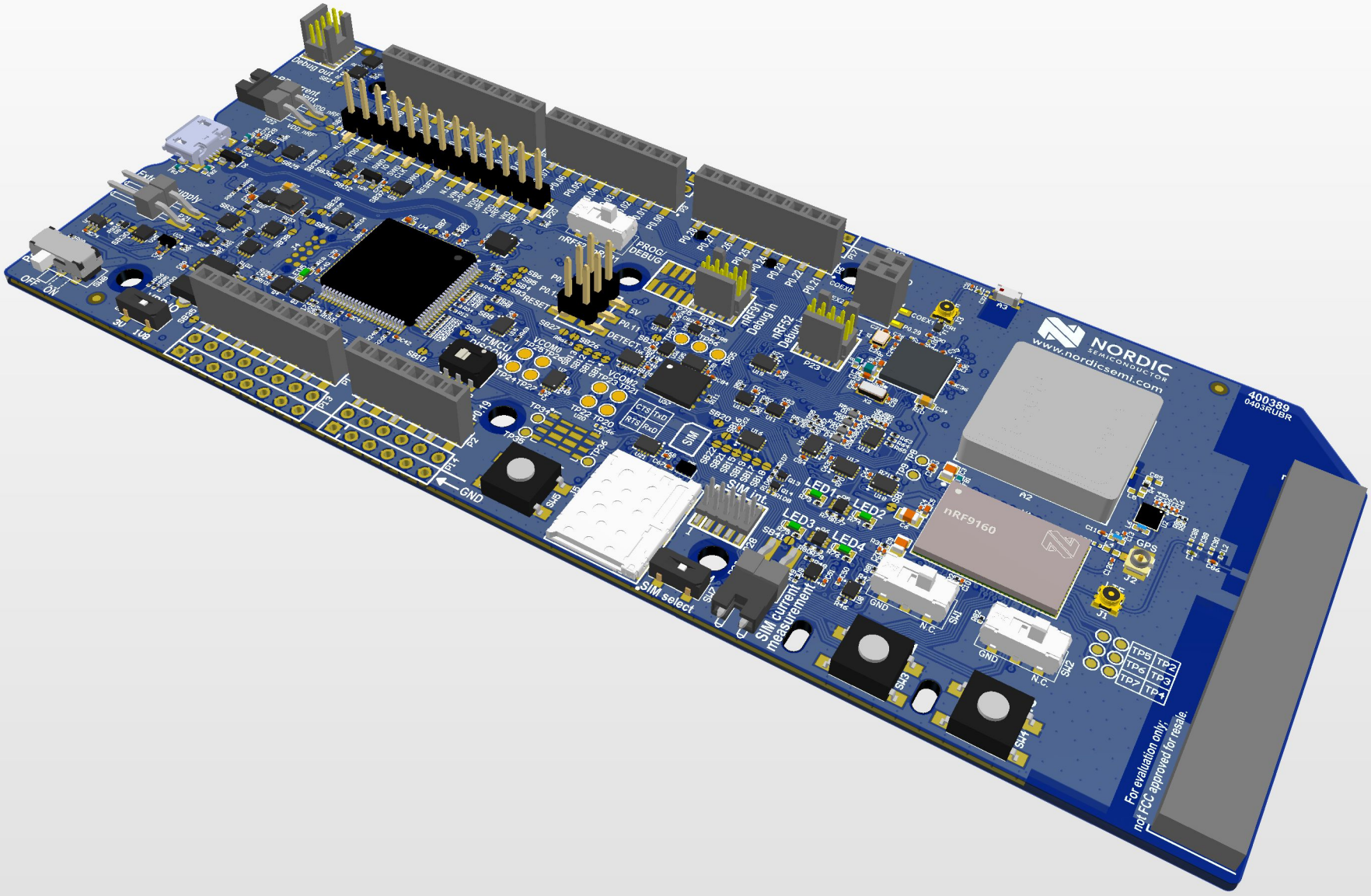
NORDIC
SEMICONDUCTOR
www.nordicsemi.com
400389
0403RUBR
nRF9160
LED1
LED2
LED3
LED4
SIM
SIM select
SIM current measurement
SIM int.
GND
N.C.
For evaluation only;
not FCC approved for resale.

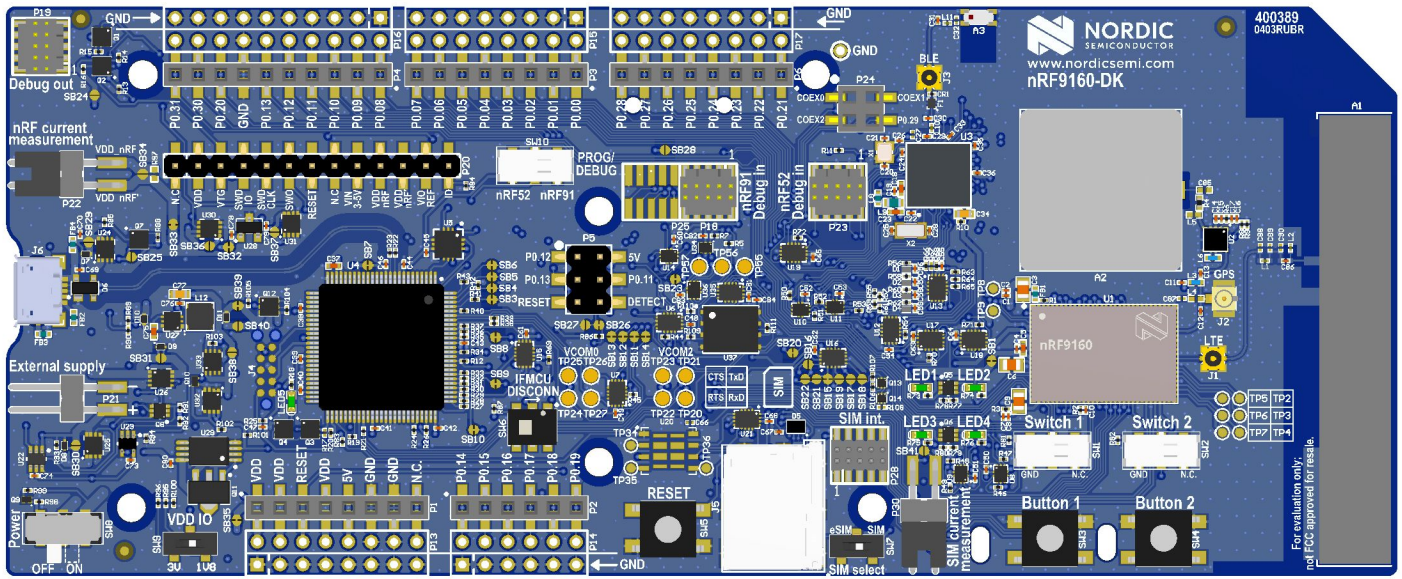
NORDIC
SEMICONDUCTOR
www.nordicsemi.com
nRF9160-DK
400389
0403RUBR
Debug out
nRF current measurement
External supply
Power
OFF ON
VDD IO
3V 1V8
PROG/ DEBUG
nRF52 nRF91
nRF91 Debug in
nRF52 Debug in
IFMCU DISCONN
RESET
BLE
GPS
LTE
nRF9160
LED1 LED2 LED3 LED4
Switch 1
Switch 2
Button 1
Button 2
SIM int.
SIM select
SIM current measurement
For evaluation only; not FCC approved for resale.