POWER INPUT SELECTION

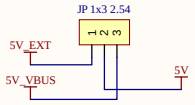

5V to 3.3V

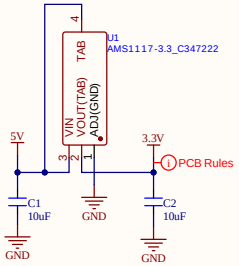

POWER LED

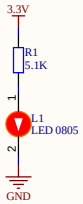

USER LED

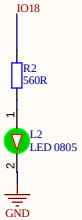

USB CONNECTOR

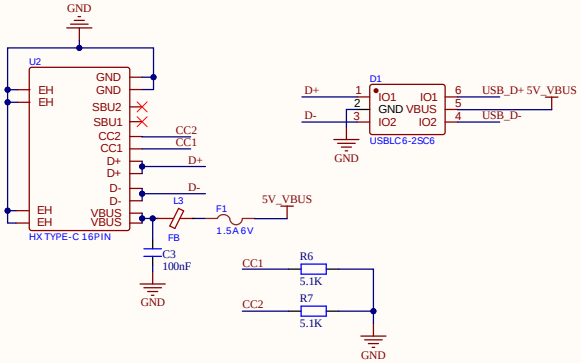

USB TO SERIAL

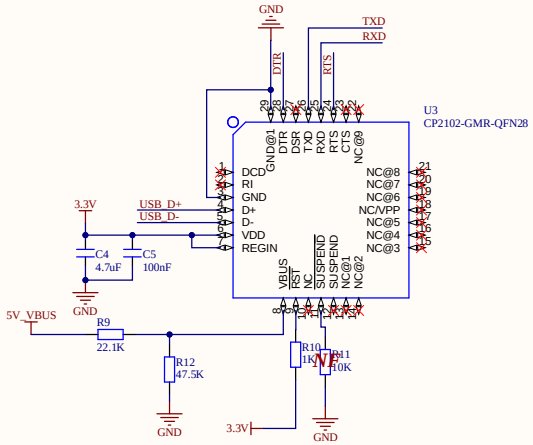

SERIAL SIGNALS HANDLING

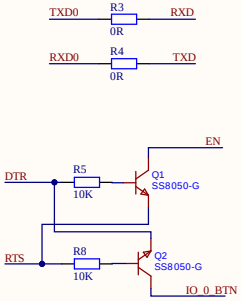

RESET BUTTON

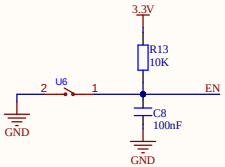

BOOT/USER BUTTON

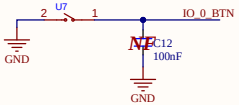

ESP32

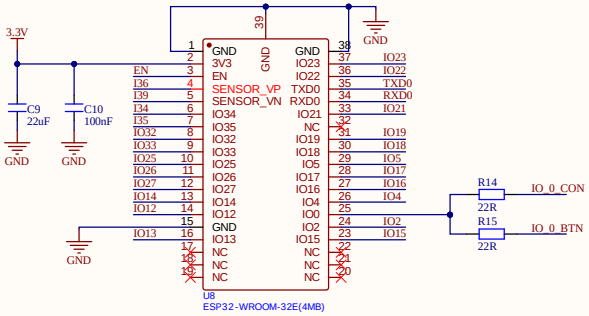
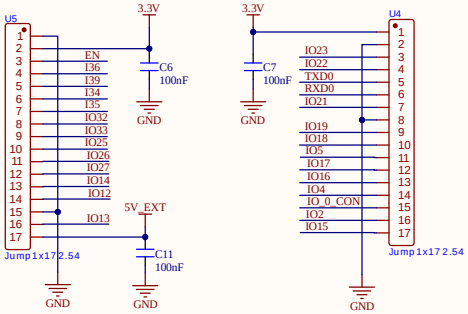
CONNECTORS