Appendix M – Energy and Safety Limits for UBT Experiments

M.1 Purpose

This appendix specifies energetic and safety envelopes for laboratory tests of Unified Biquaternion Theory (UBT) using standing/modulated EM modes (cf. Appendix L) and their phase-sector coupling through ψ. Where $\psi = 0$ (or averages to zero), UBT reduces to GR/Maxwell and remains consistent with existing experiments.

M.2 Scaling Relations (Stored Energy, Drive Power)

For a cavity mode with angular frequency $\omega = 2\pi f$, volume V, effective permittivity ϵ_{eff}, rms electric field E_{rms} and quality factor Q,

$$U \;\approx\; \tfrac{1}{2}\,\epsilon_{\text{eff}}\,E_{\text{rms}}^2\,V, \qquad P_{\text{in}} \;\approx\; \frac{\omega\,U}{Q}. \tag{1}$$

The fractional frequency shift of a metrological probe by a weak metric perturbation $h_{\mu\nu}$ is

$$\frac{\Delta f}{f} \;\simeq\; -\frac{1}{2}\left\langle h_{00} + n^i n^j h_{ij}\right\rangle_{\text{mode}}, \tag{2}$$

with n^i the local propagation direction. In GR alone, EM $T^{\mu\nu}$ yields negligibly small $h_{\mu\nu}$ for lab powers; in UBT, the effective source is

$$T_{\text{eff}}^{\mu\nu} \;=\; T_{\text{EM}}^{\mu\nu} + \lambda_\psi\,\Psi^{\mu\nu}(\psi, F) \quad\Rightarrow\quad h_{\mu\nu} \propto \int \frac{T_{\text{eff}}^{\mu\nu}}{|\mathbf{x}-\mathbf{x}'|}\,d^3x' \;\;\text{(Appendix L)}. \tag{3}$$

M.3 Numeric Envelope (Indicative Values)

Assuming $V = 1.0 \times 10^{-3}\,\text{m}^3$, $Q = 10^6$, $\epsilon_{\text{eff}} \approx \epsilon_0$, two drive levels give:

f [GHz]	E_{rms} [kV/m]	U [J]	P_{in} [W]
2.4	50	0.011	0.17
5.0	50	0.011	0.35
10.0	50	0.011	0.70
2.4	200	0.18	2.7
5.0	200	0.18	5.7
10.0	200	0.18	11.3

These are order-of-magnitude targets; thermal management and breakdown thresholds must be respected (Sec. M.5).

M.4 Detectability Window

Let $\Delta f/f \geq \sigma_f$ be the instrument sensitivity (e.g. $\sigma_f \sim 10^{-8}$). Writing

$$\frac{\Delta f}{f} \sim \mathcal{K}_{\mathrm{UBT}}\, U\,, \tag{4}$$

the minimum stored energy is $U_{\min} \approx \sigma_f/\mathcal{K}_{\mathrm{UBT}}$. In GR one expects $\mathcal{K}_{\mathrm{GR}} \ll \mathcal{K}_{\mathrm{UBT}}$; thus any detection at lab powers constrains λ_ψ and $\Psi^{\mu\nu}$.

M.5 Safety Limits

- **Dielectric breakdown (vacuum)**: avoid peak fields $\gtrsim 30\,\mathrm{MV/m}$ at surfaces; smooth geometry, proper conditioning.
- **Heating/Quench**: keep surface losses below cryostat capacity; derate for seams and couplers.
- **Exposure/EMC**: enclose in Faraday cage; comply with local RF exposure limits; interlocks and E-stop required.

M.6 Control and Modulation of Hopfions & Psychons

UBT links hopfion topology and psychon excitations through the phase sector ψ. A practical loop: EM field pattern $\to T^{\mu\nu}_{\mathrm{eff}} \to \Delta g_{\mu\nu}$, while ψ modulates both $T^{\mu\nu}_{\mathrm{eff}}$ and the metric response (Appendix L). Below is a *self-contained TikZ* block diagram (no external file).

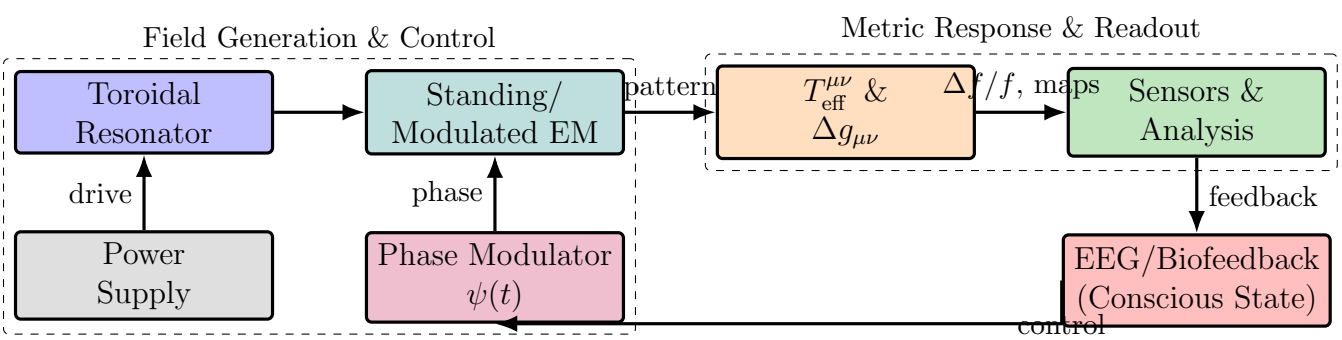

Figure 1: Closed-loop control of hopfion/psychon dynamics via phase modulation $\psi(t)$ and standing/modulated EM fields. Diagram is drawn with TikZ (no external image).

M.7 Summary

UBT-compatible operation keeps EM powers in safe ranges while seeking a measurable metrological signature ($\Delta f/f$) mediated by the ψ-sector. The TikZ control diagram specifies a practical loop for hopfion/psychon modulation without external figures.