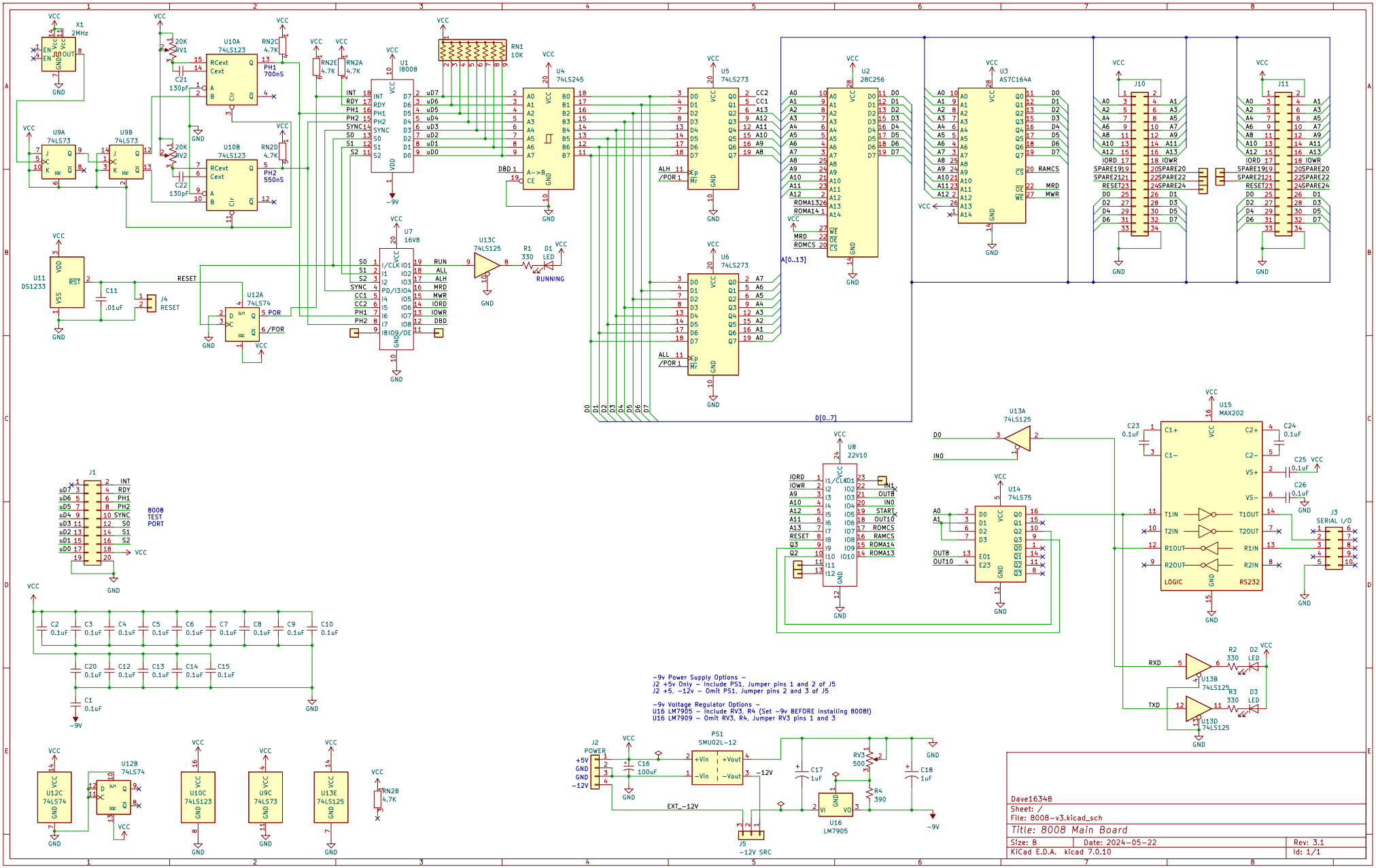
X1 2MHz
U10A 74LS123
U10B 74LS123
U9A 74LS73
U9B 74LS73
U11 DS1233
U12A 74LS74
U1 I8008
U7 16V8
U4 74LS245
U5 74LS273
U6 74LS273
U2 28C256
U3 AS7C164A
U13C 74LS125
J10
J11
J1
8008 TEST PORT
J4 RESET
RUNNING
U8 22V10
U13A 74LS125
U14 74LS75
U15 MAX202
J3 SERIAL I/O
U13B 74LS125
U13D 74LS125
U12B 74LS74
U12C 74LS74
U10C 74LS123
U9C 74LS73
U13E 74LS125
RN2B 4.7K
-9v Power Supply Options -
J2 +5v Only - Include PS1, Jumper pins 1 and 2 of J5
J2 +5, -12v - Omit PS1, Jumper pins 2 and 3 of J5
-9v Voltage Regulator Options -
U16 LM7905 - Include RV3, R4 (Set -9v BEFORE installing 8008!)
U16 LM7909 - Omit RV3, R4, Jumper RV3 pins 1 and 3
J2 POWER
PS1 SMU02L-12
U16 LM7905
J5 -12V SRC
Dave1634B
Sheet: /
File: 8008-v3.kicad_sch
Title: 8008 Main Board
Size: B
Date: 2024-05-22
Rev: 3.1
KiCad E.D.A. kicad 7.0.10
Id: 1/1