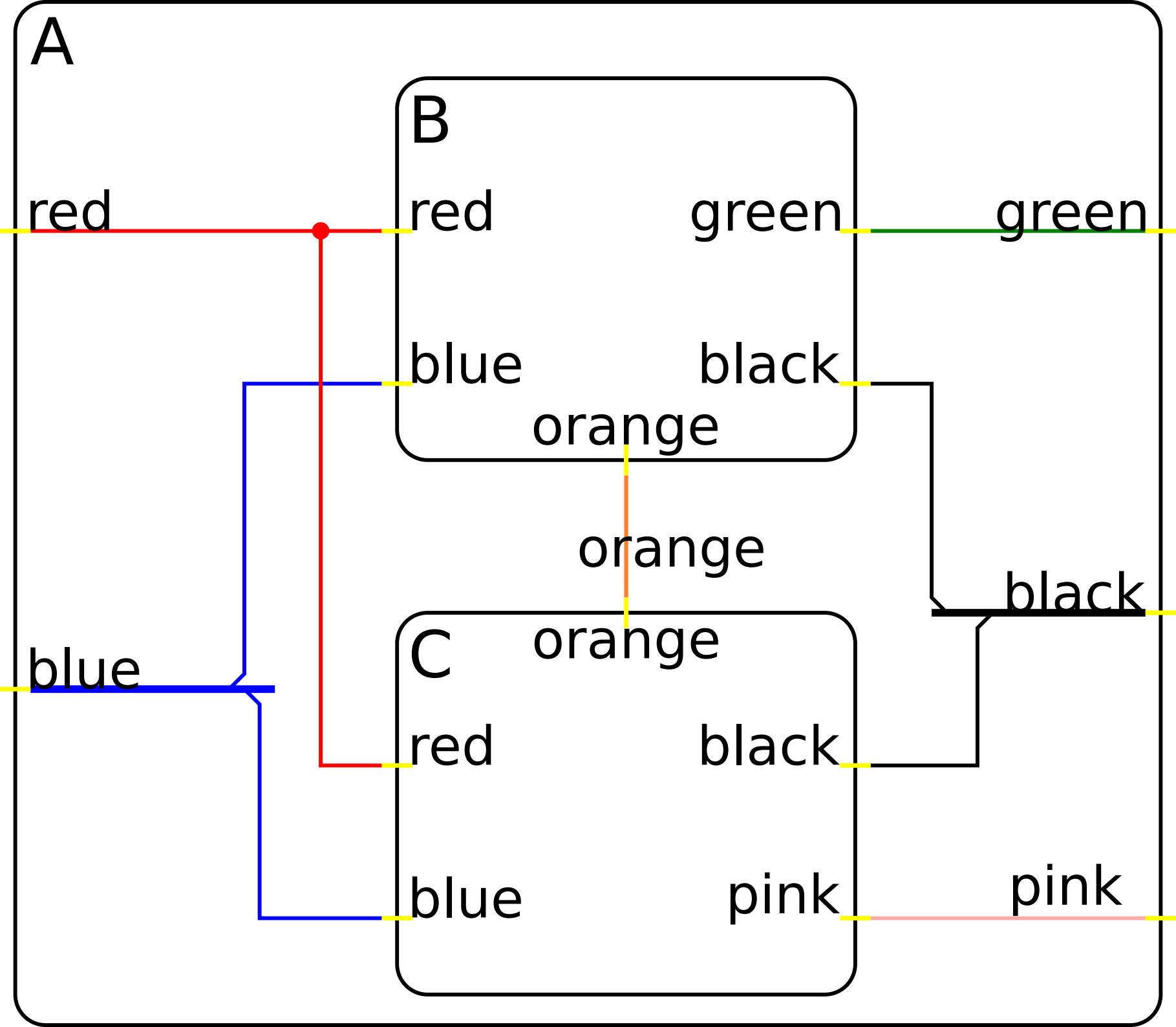
A
B
red
red
green
green
blue
black
orange
orange
black
C
orange
blue
red
black
blue
pink
pink