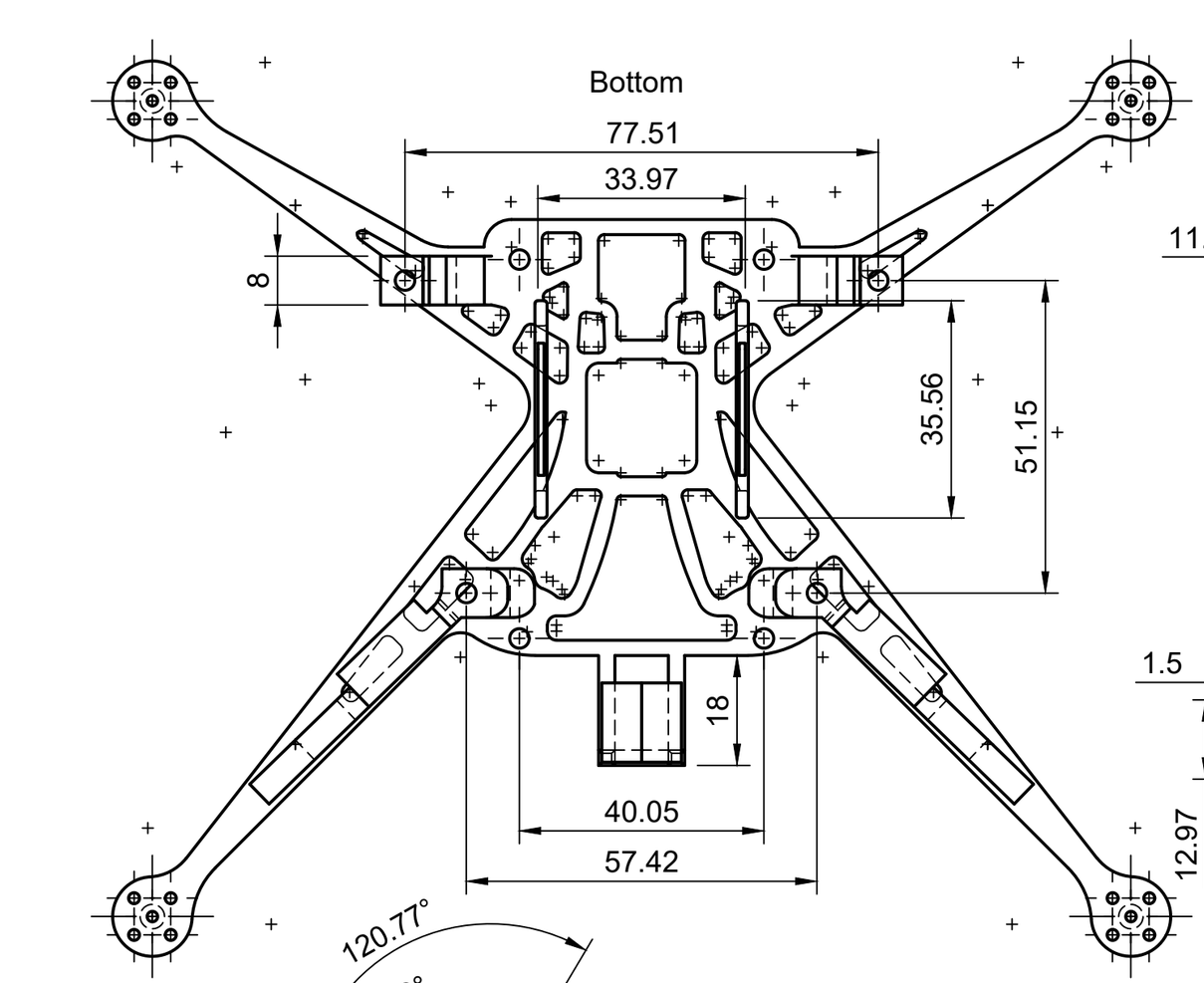

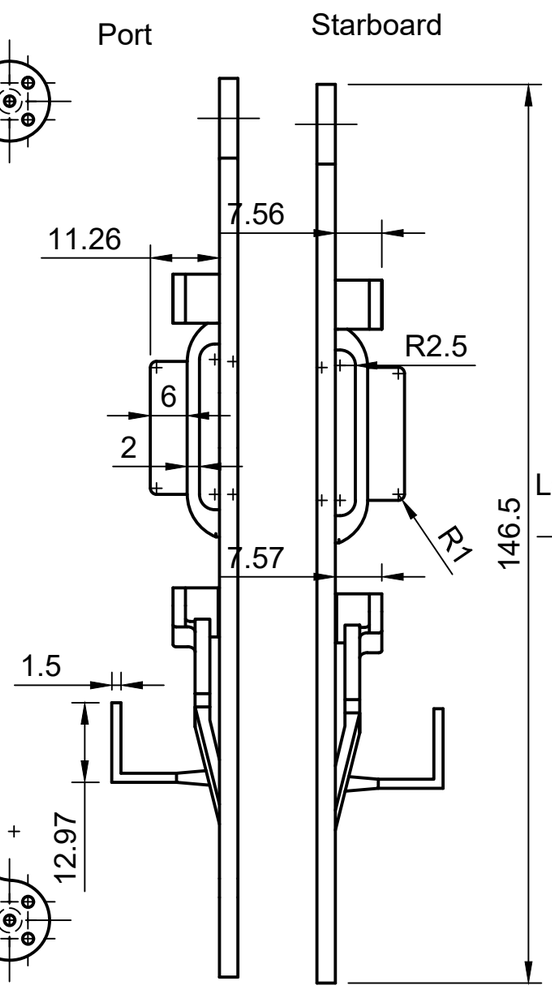

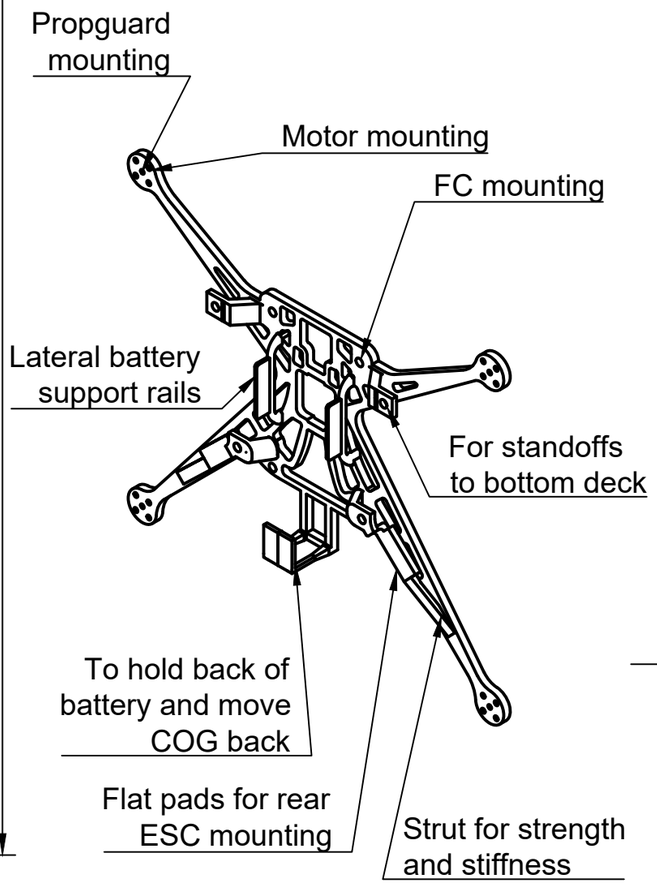

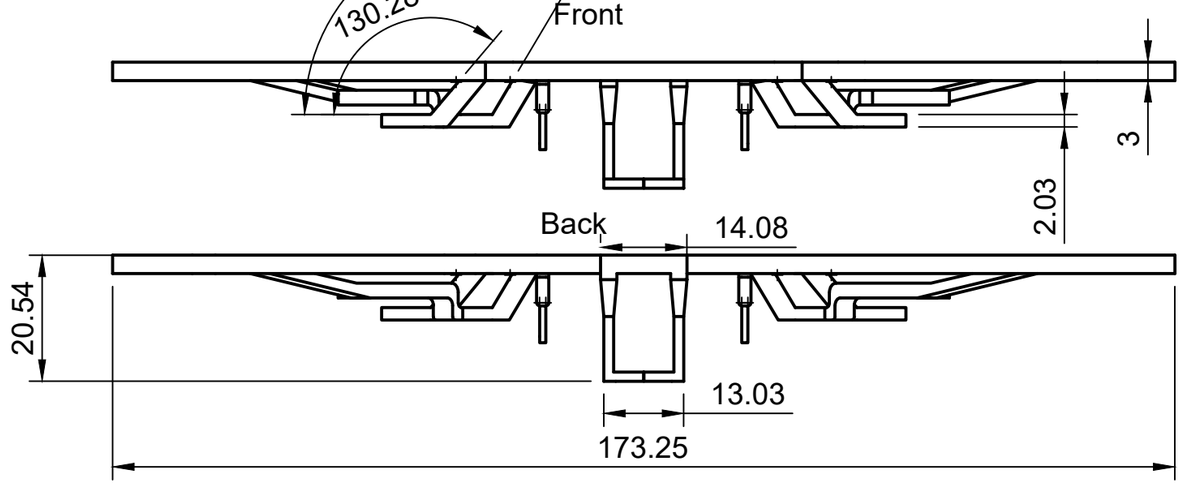

1:1 on A3

Licensed under CC-BY-NC-SA 4.0

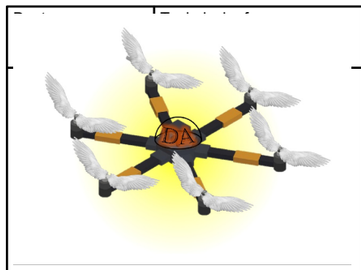

Created by: Monika Eyer 26/10/2025	Approved by
Document type	Document status
Title: Main_Frame_V9_only	DWG No.
	Rev. / Date of issue / Sheet 1/2

1:1 on A3

Top view Details

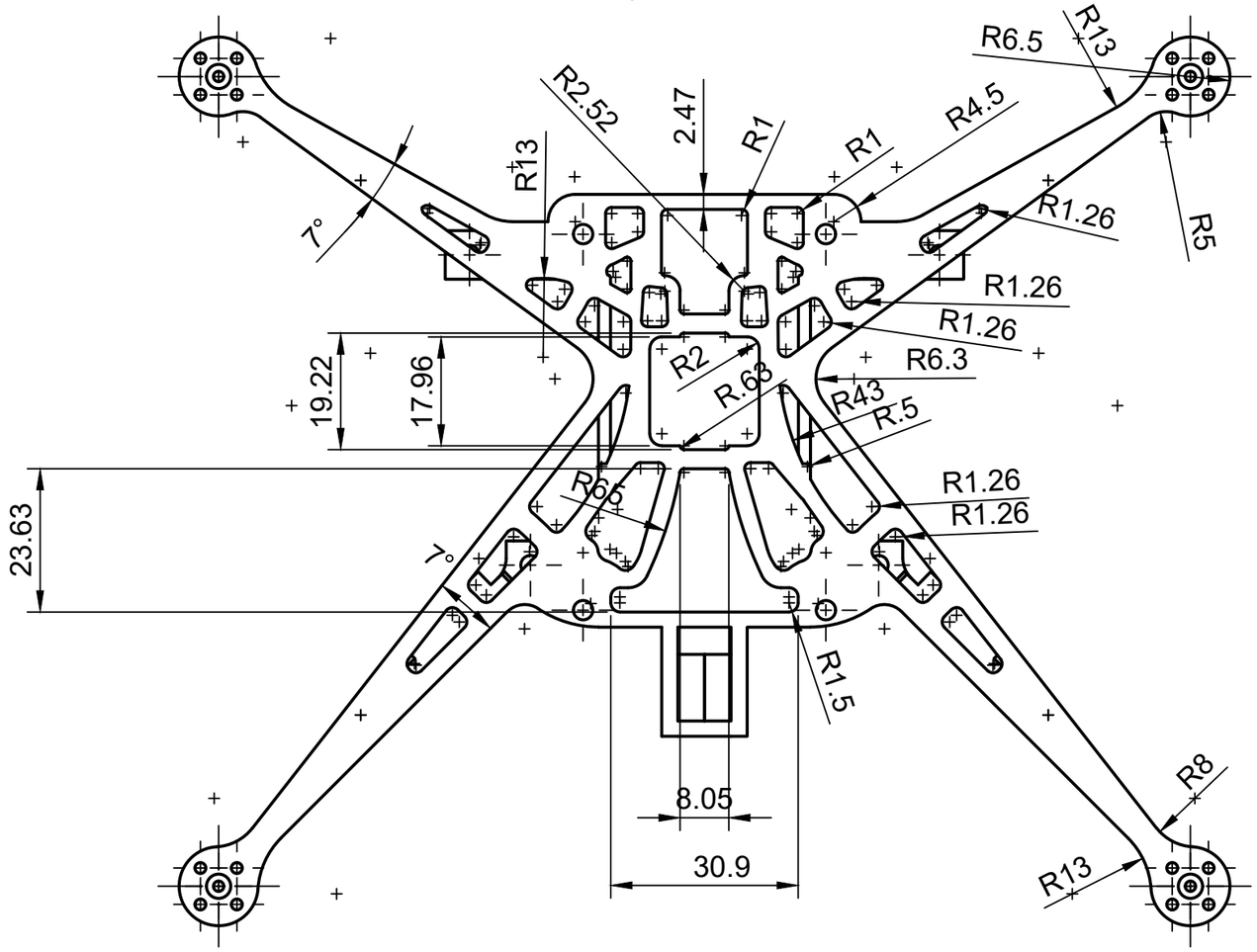

Licensed under CC-BY-NC-SA 4.0

Dept.	Technical reference	Created by: Monika Eyer 26/10/2025	Approved by
		Document type	Document status
		Title: Main_Frame_V9_only	DWG No.
			Rev. / Date of issue / Sheet 2/2