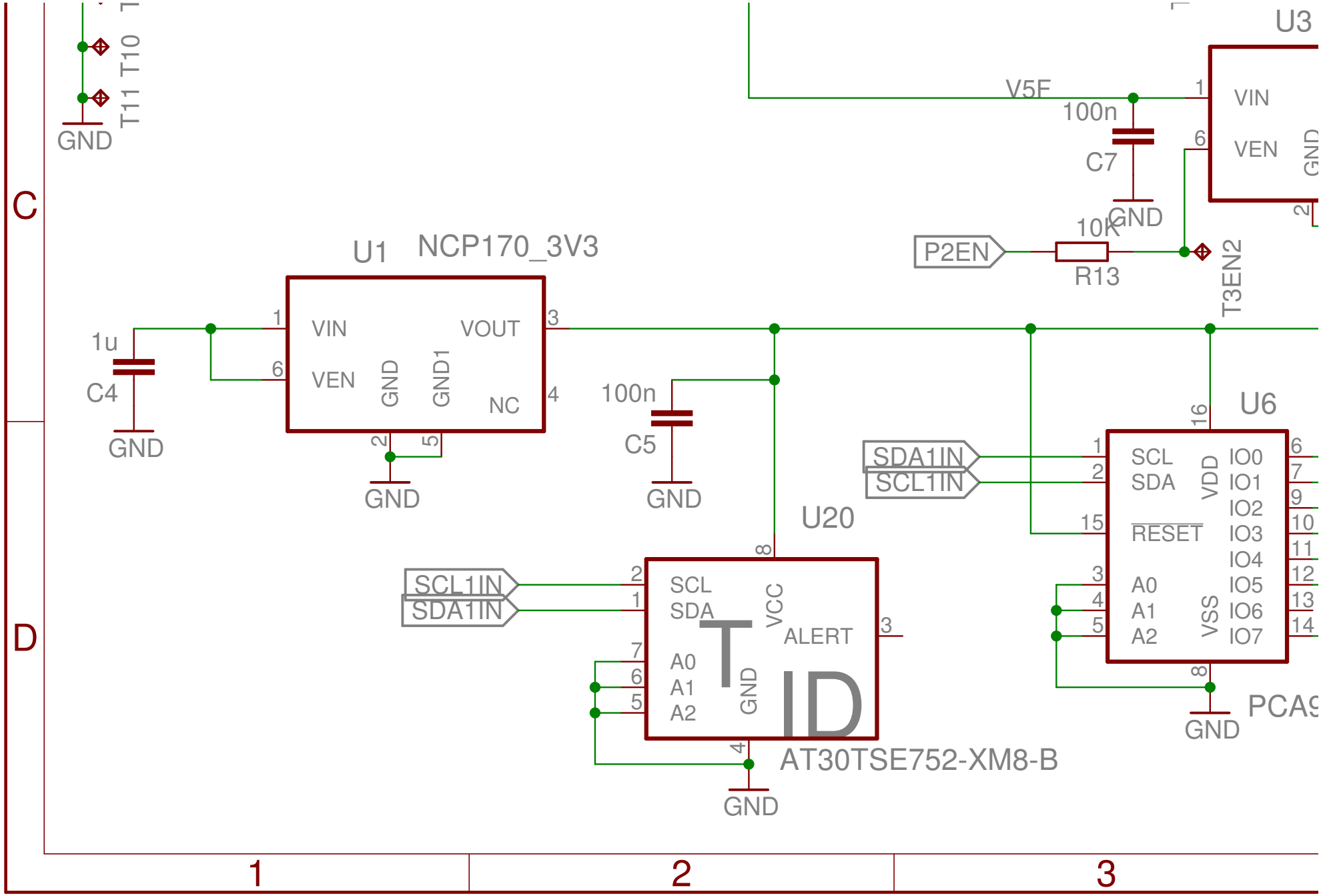
T11 T10
GND
U3
V5F
100n
C7
GND
VIN
VEN
GND
10K
P2EN
R13
T3EN2
U1 NCP170_3V3
1u
C4
GND
VIN
VEN
GND
GND1
VOUT
NC
GND
100n
C5
GND
U20
SCL1IN
SDA1IN
SCL
SDA
VCC
ALERT
A0
A1
A2
GND
AT30TSE752-XM8-B
GND
U6
SDA1IN
SCL1IN
SCL
SDA
VDD
RESET
A0
A1
A2
VSS
IO0
IO1
IO2
IO3
IO4
IO5
IO6
IO7
GND
PCA9
C
D
1
2
3

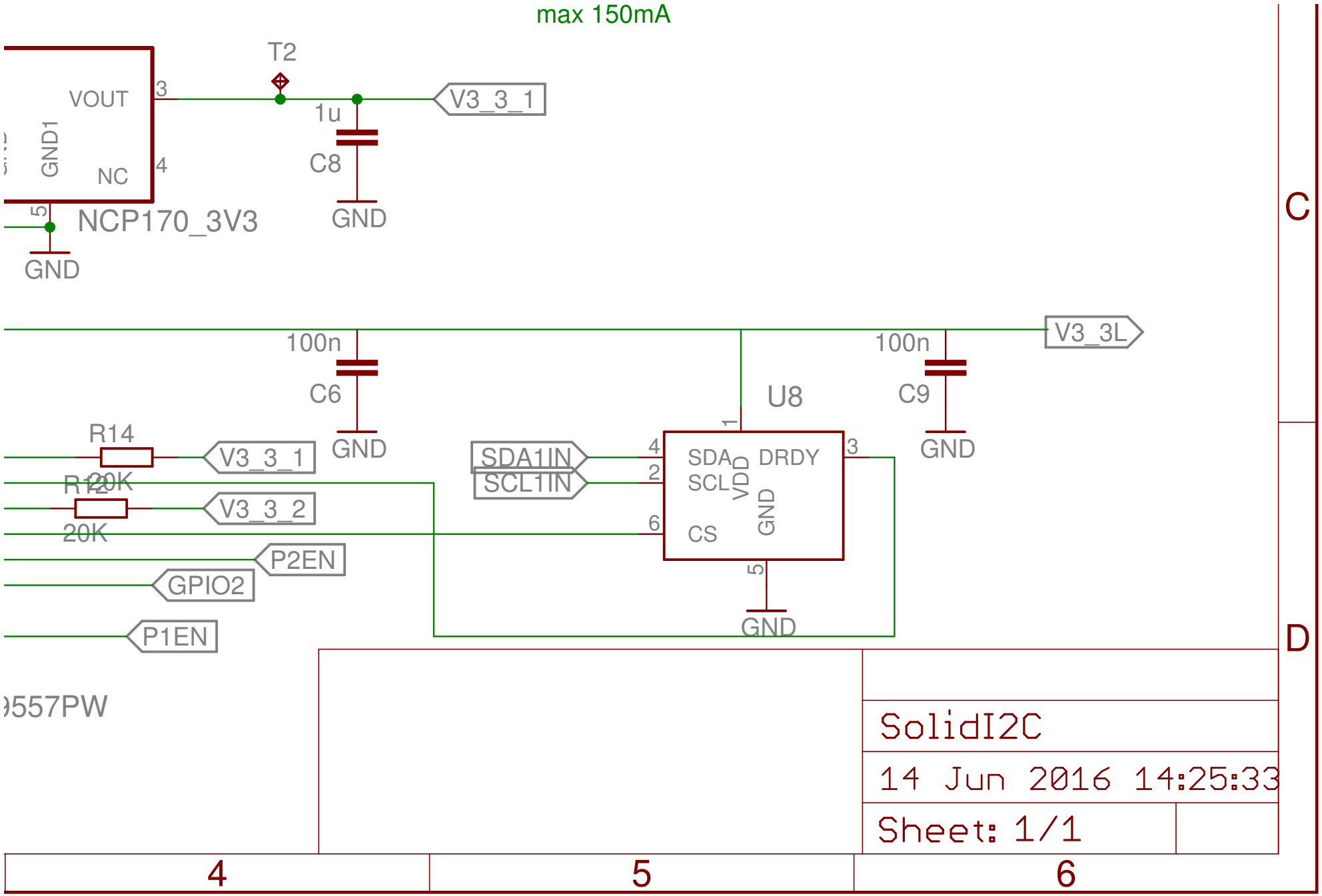
max 150mA
T2
VOUT
3
GND1
NC
4
5
NCP170_3V3
GND
1u
C8
GND
V3_3_1
100n
C6
GND
V3_3L
100n
C9
GND
U8
R14
20K
V3_3_1
R12
20K
V3_3_2
P2EN
GPIO2
P1EN
SDA1IN
SCL1IN
SDA
SCL
VDD
DRDY
GND
CS
GND
9557PW
SolidI2C
14 Jun 2016 14:25:33
Sheet: 1/1
C
D
4
5
6

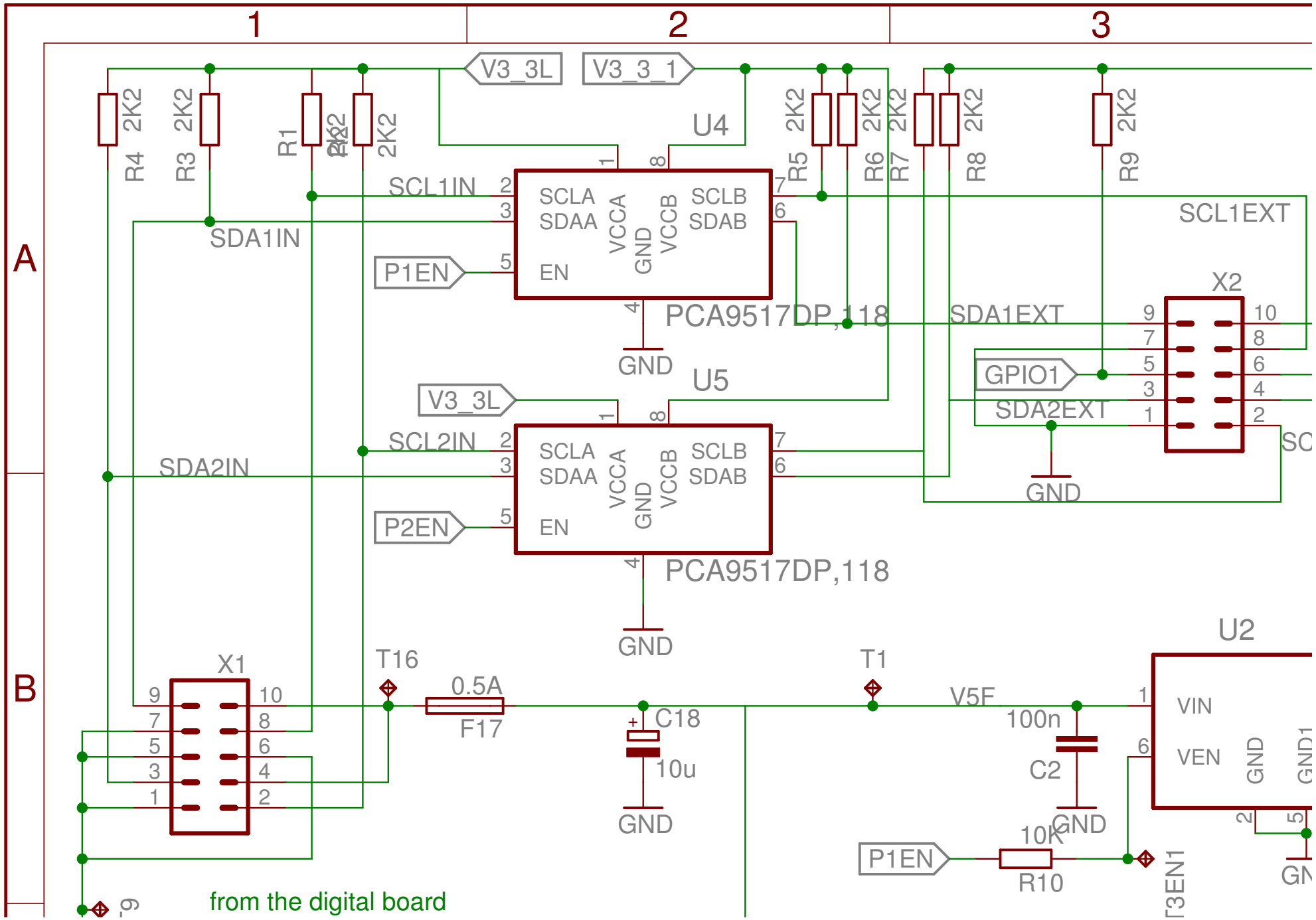
1
2
3
A
B
V3_3L
V3_3_1
R4 2K2
R3 2K2
R1
2K2
R5 2K2
R6 2K2
R7 2K2
R8 2K2
R9 2K2
U4
SCL1IN
SDA1IN
SCLA
SDAA
VCCA
GND
VCCB
SCLB
SDAB
EN
P1EN
PCA9517DP,118
GND
SCL1EXT
SDA1EXT
X2
GPIO1
SDA2EXT
U5
V3_3L
SCL2IN
SDA2IN
P2EN
PCA9517DP,118
GND
X1
T16
0.5A
F17
C18
10u
GND
T1
V5F
100n
C2
GND
U2
VIN
VEN
GND
GND1
P1EN
10K
R10
from the digital board

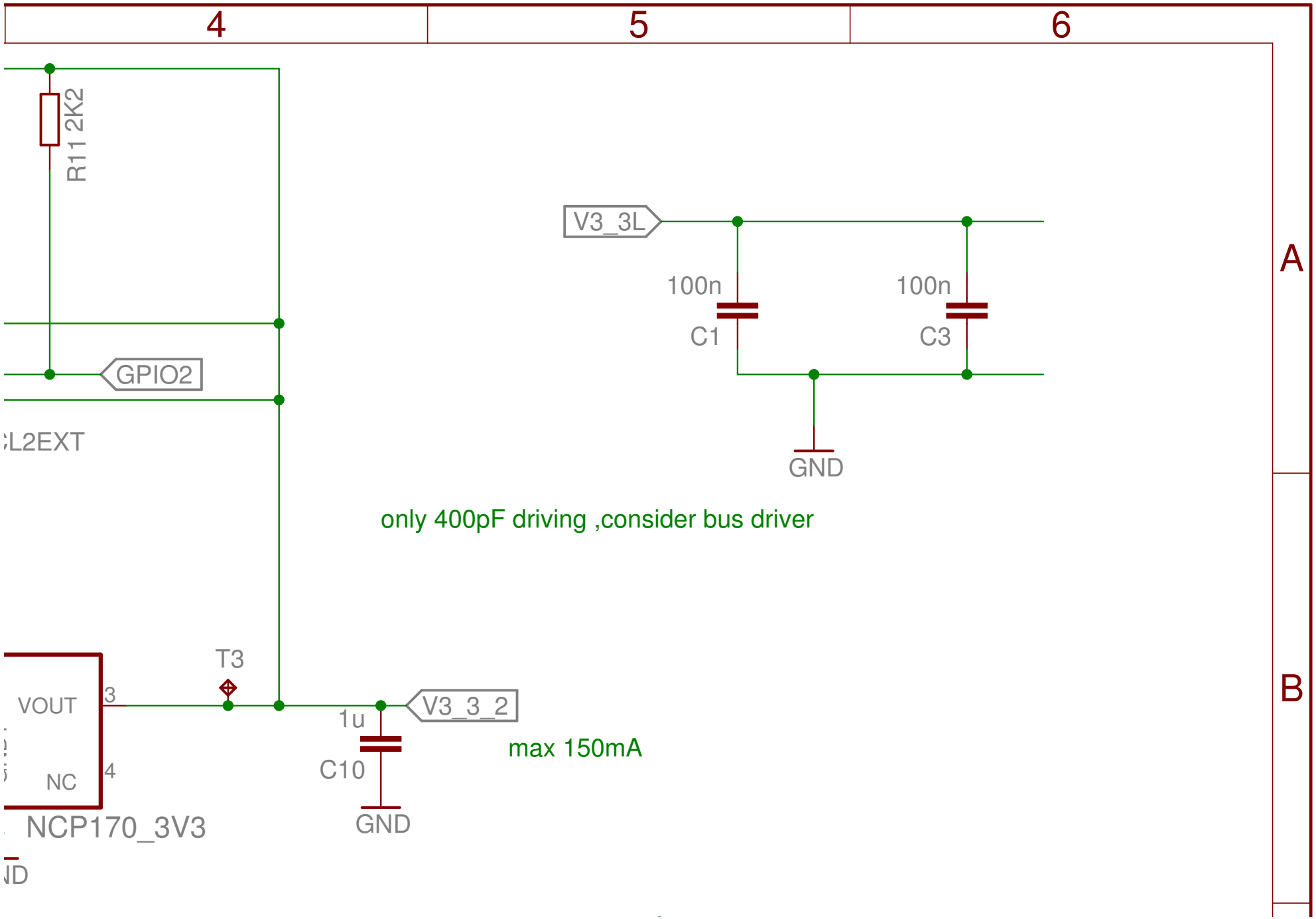
4
5
6
A
B
R11 2K2
GPIO2
L2EXT
V3_3L
100n
C1
100n
C3
GND
only 400pF driving ,consider bus driver
T3
VOUT
3
NC
4
NCP170_3V3
1u
C10
GND
V3_3_2
max 150mA
ND