A 2 THIS DRAWING DOES NOT CONFORM TO B.S. 3939

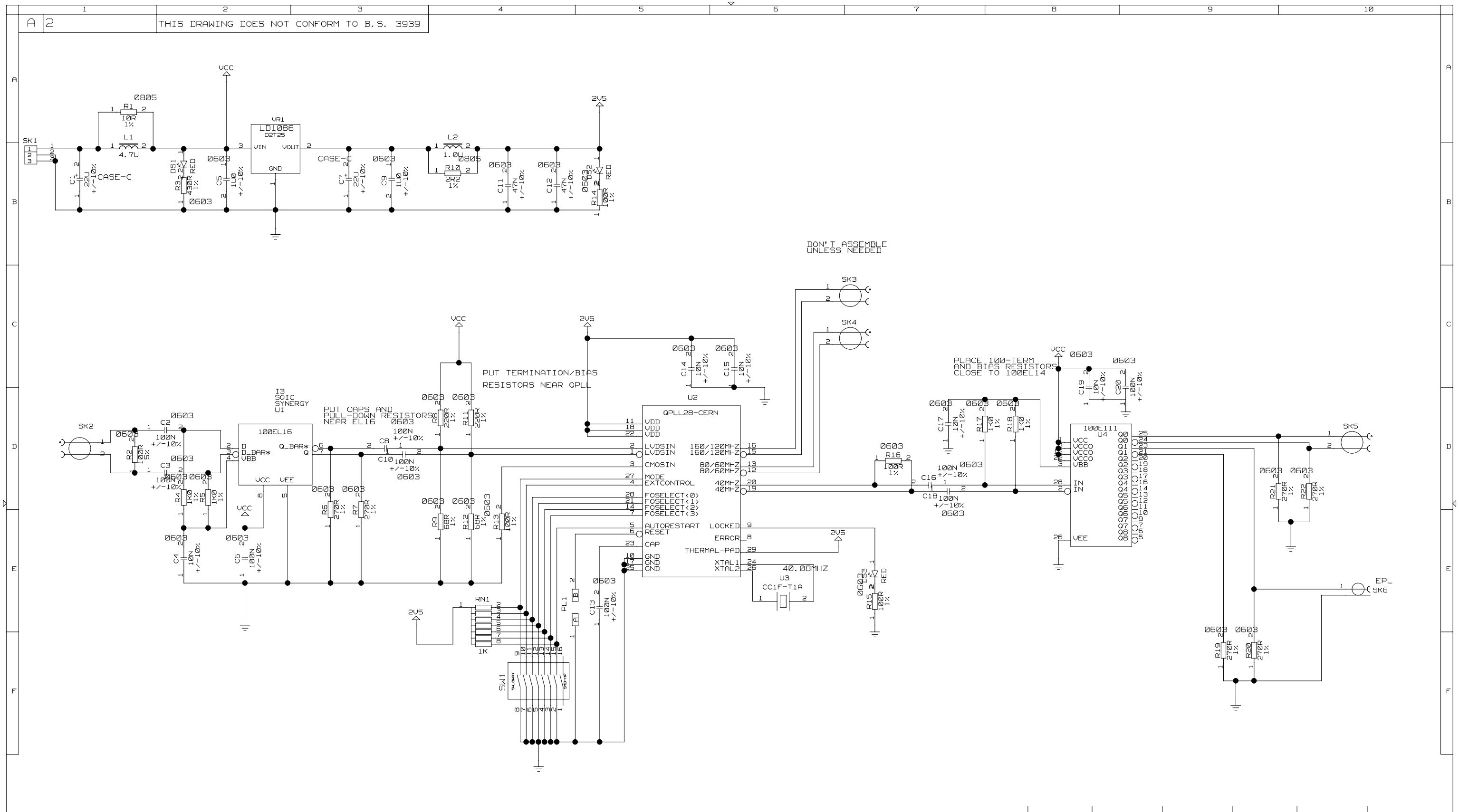

	Wed Jan 07 11:06:10 2004				
		D. CUSSANS			
ISSUE	DATE	MOD NO.	DRN BY.	CHKD.	APPD.	STATUS

USED ON CMS-GCT

© UOB-HEP 2003

UOB-HEP
UNIVERSITY OF BRISTOL
HIGH ENERGY PHYSICS GROUP
H.H.WILLS PHYSICS LAB, TYNDALL AVE, BRISTOL, BS8 1TL.

TITLE UOB-HEP-PC0035_lib

MODULE: QPLL BUFFER CIRCUIT.
TAKES DIFFERENTIAL PECL/ECL
OUTPUTS DIFF. PECL CLOCK AND SINGLE-ENDED CLK

A 2

MODULE PAGE: 1 OF 3
OVERALL PAGE: 1 OF 3

TOTAL NO. OF SHEETS

A 2 THIS DRAWING DOES NOT CONFORM TO B.S. 3939

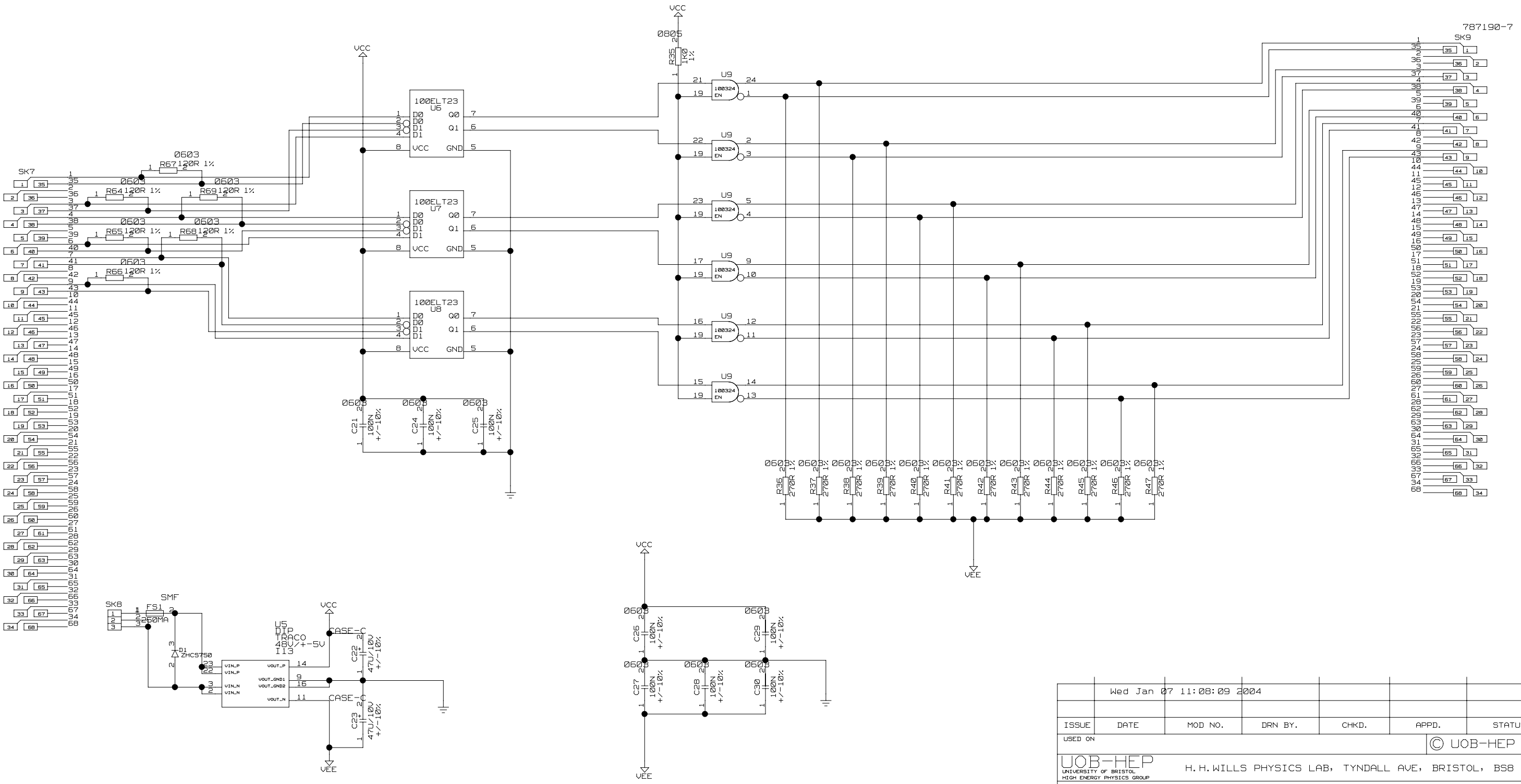

ISSUE	DATE	MOD NO.	DRN BY.	CHKD.	APPD.	STATUS
	Wed Jan 07 11:08:09 2004					

USED ON

© UOB-HEP 20

UOB-HEP
UNIVERSITY OF BRISTOL
HIGH ENERGY PHYSICS GROUP

H.H.WILLS PHYSICS LAB, TYNDALL AVE, BRISTOL, BS8 1TL.

TITLE uob_hep_pc005a_lib

MODULE: qp11 SIMPLE 6-BIT PECL--> ECL TRANSLATOR
(USES COMPONENTS AVAILABLE FROM RS COMPONENTS)

A2

MODULE PAGE: 2 OF 3
OVERALL PAGE: 2 OF 3

TOTAL NO. OF SHEETS

A2 THIS DRAWING DOES NOT CONFORM TO B.S. 3939

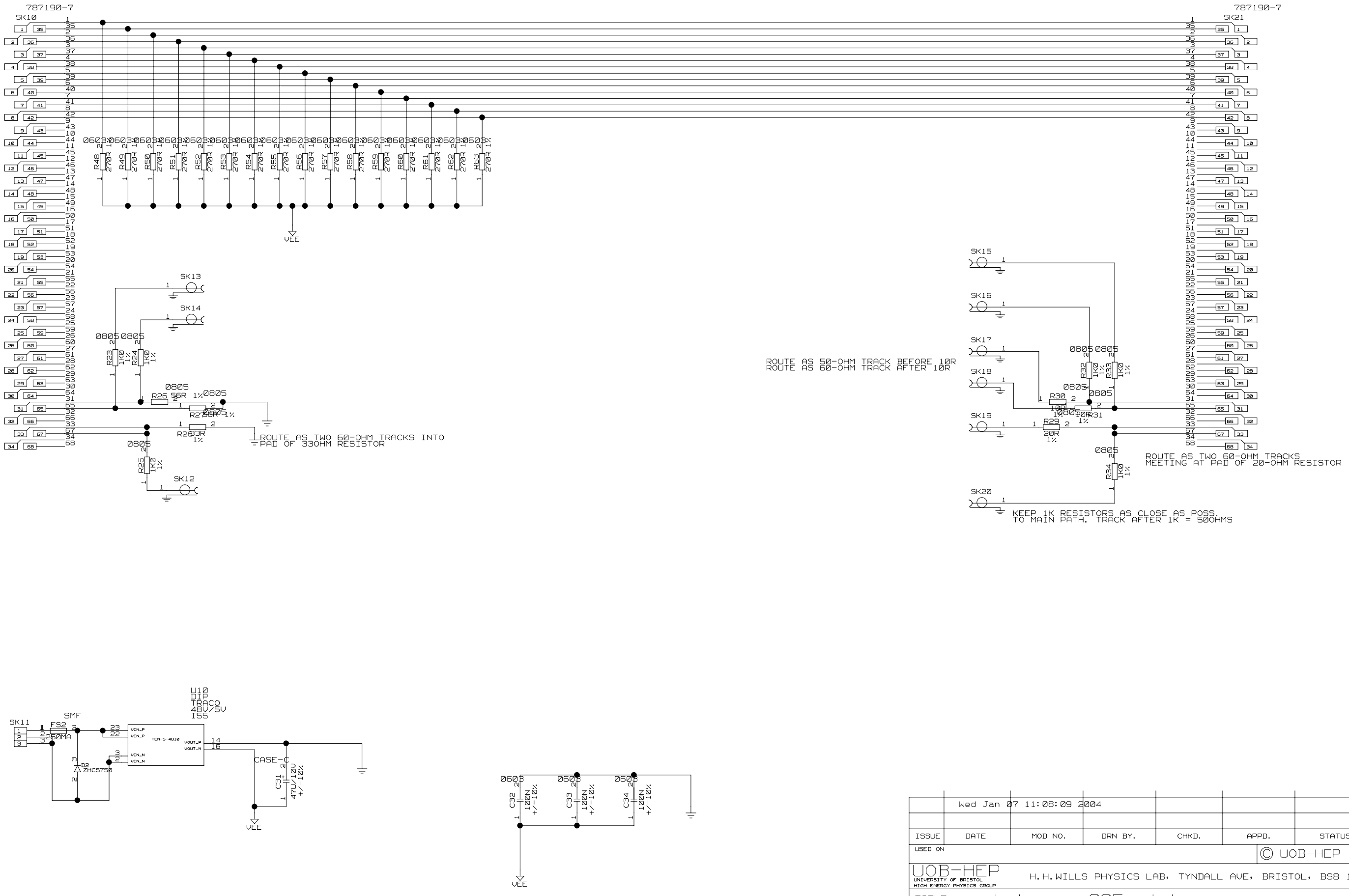

ISSUE	DATE	MOD NO.	DRN BY.	CHKD.	APPD.	STATUS
	Wed Jan 07 11:08:09 2004					

USED ON

© UOB-HEP 20

UOB-HEP
UNIVERSITY OF BRISTOL
HIGH ENERGY PHYSICS GROUP

H.H.WILLS PHYSICS LAB, TYNDALL AVE, BRISTOL, BS8 1TL.

TITLE uob_hep_pc005a_lib

MODULE: TEST OF PULL-DOWN RESISTOR VALUES
SET-UP FOR TDR MEASUREMENT OF
COMMON AND DIFFERENTIAL IMPEDANCE

A2

MODULE PAGE: 3 OF 3
OVERALL PAGE: 3 OF 3

TOTAL NO. OF SHEETS