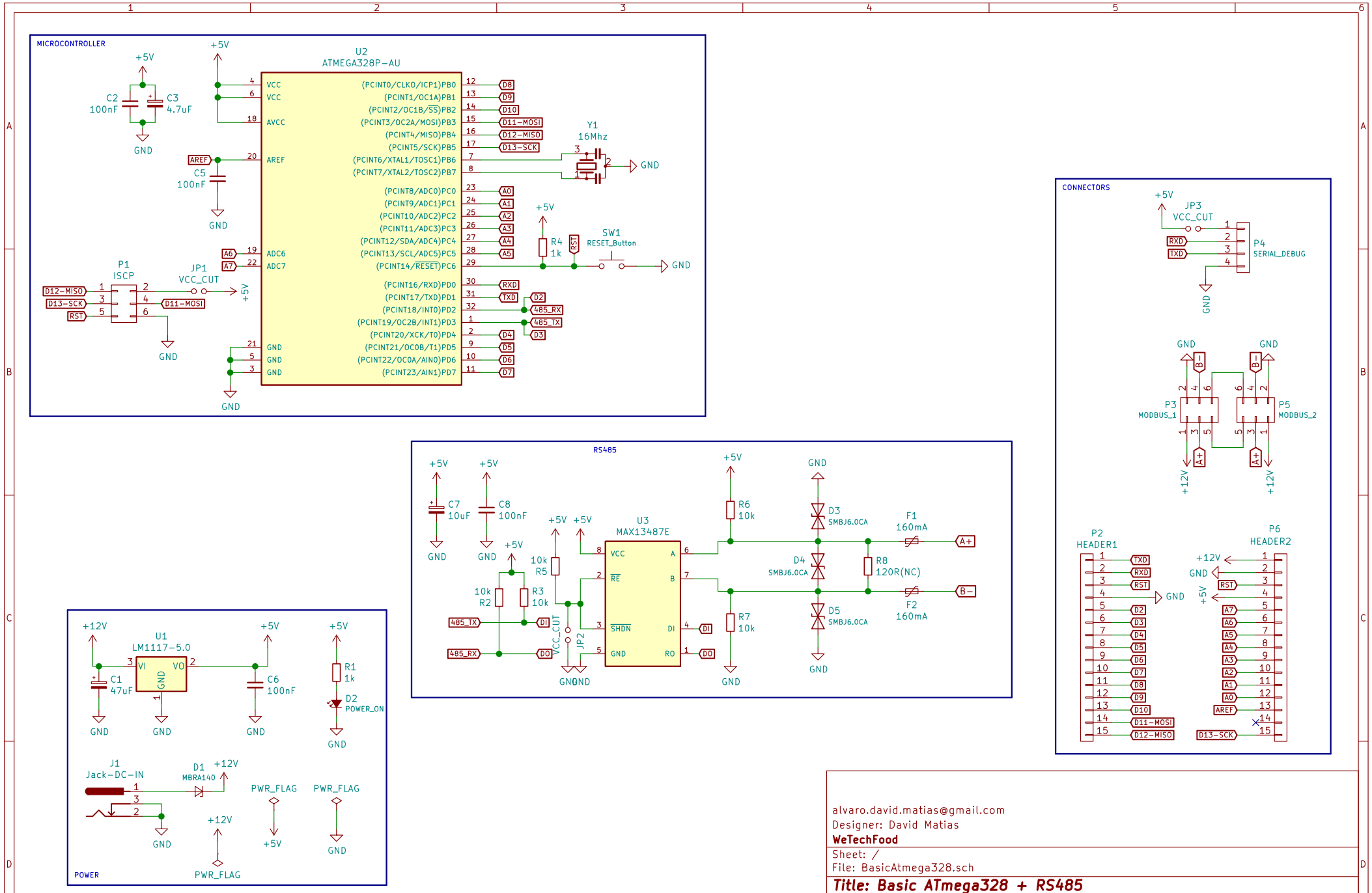

alvaro.david.matias@gmail.com
Designer: David Matias
WeTechFood
Sheet: /
File: BasicAtmega328.sch

Title: Basic ATmega328 + RS485

Size: A4	Date: 2020-12-29	Rev: V0.1
KiCad E.D.A. kicad 5.1.5+dfsg1-2build2		Id: 1/1