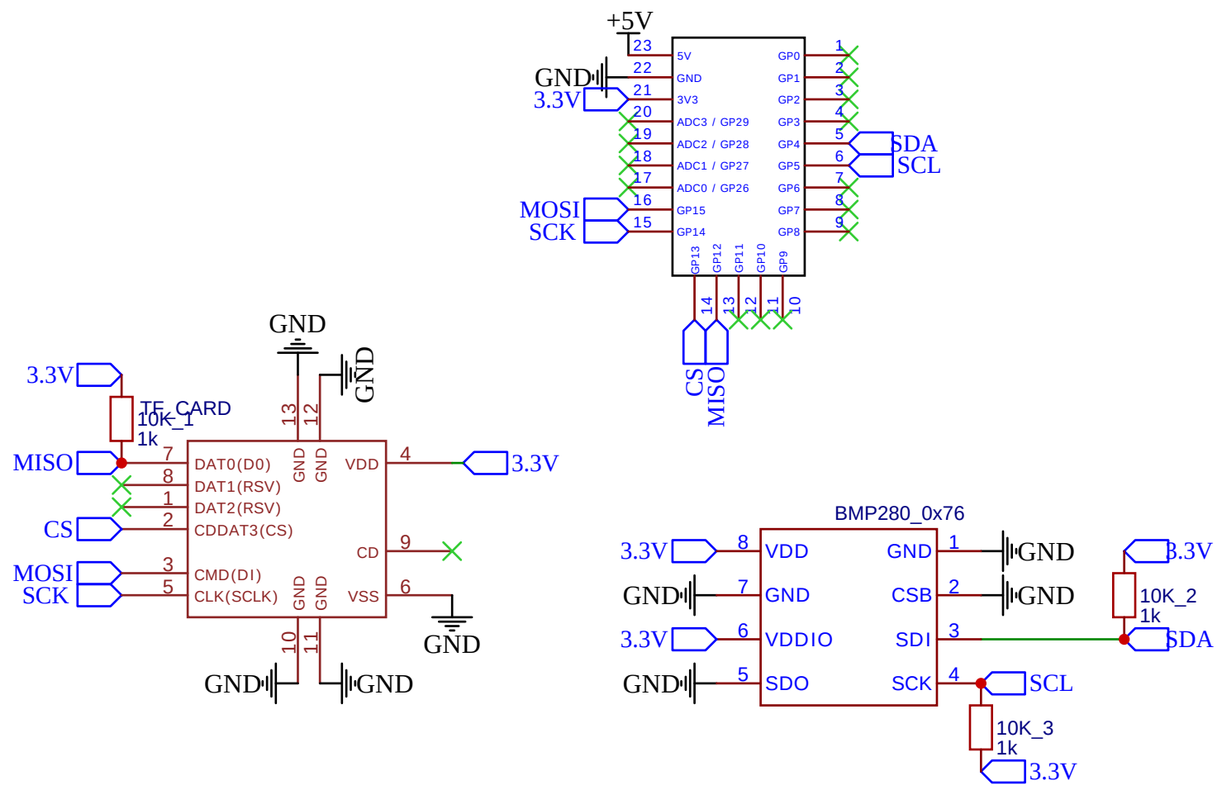

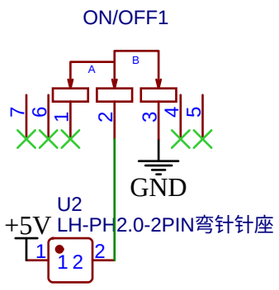

TITLE: RP2040zero BMP280 SD Cardboard rocket		REV: 1.0
嘉立创EDA	Company: Your Company	Sheet: 1/1
	Date: 2023-06-16 Drawn By: d.c.gilmour	