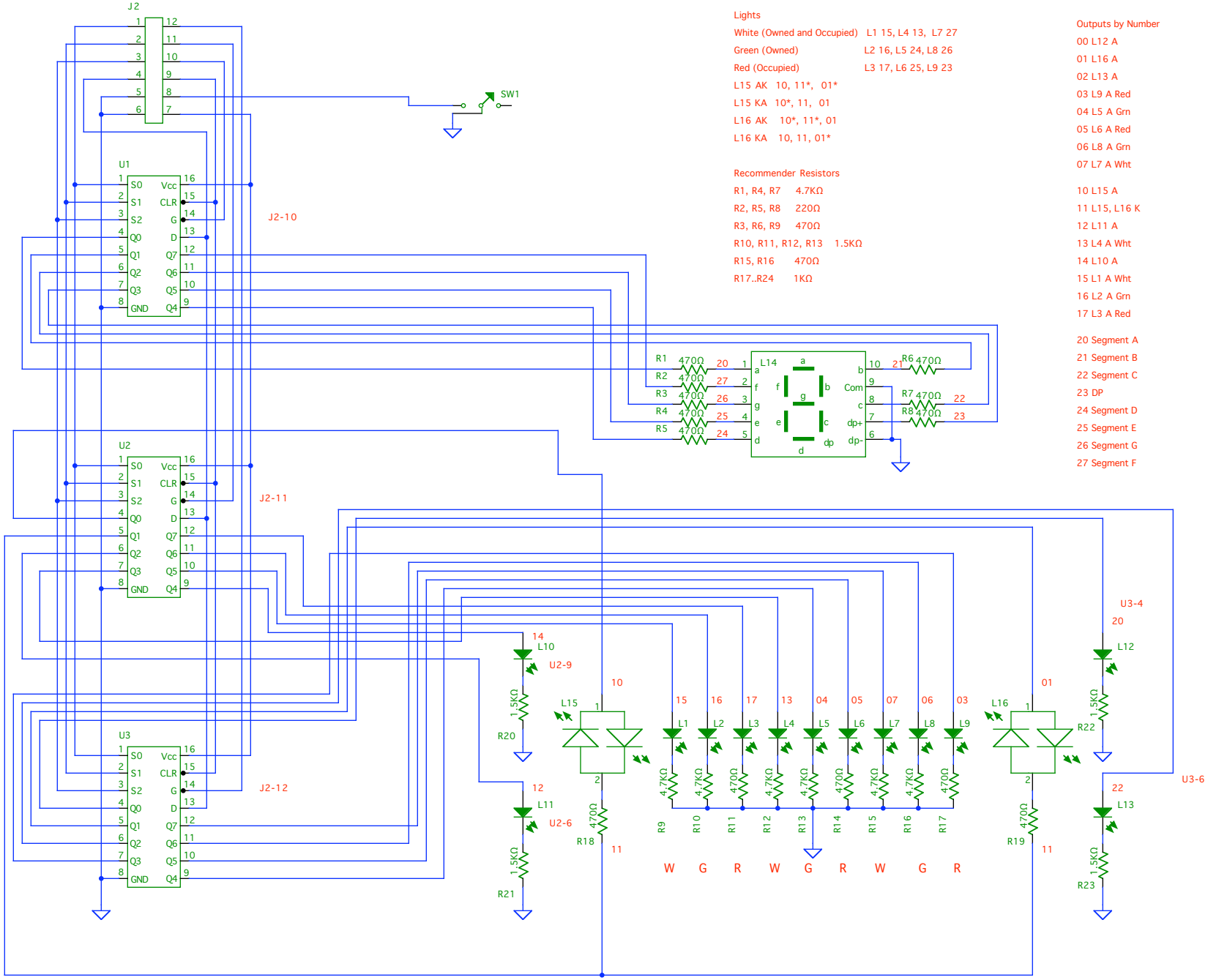

Lights

White (Owned and Occupied)	L1 15, L4 13, L7 27
Green (Owned)	L2 16, L5 24, L8 26
Red (Occupied)	L3 17, L6 25, L9 23

L15 AK 10, 11*, 01*
L15 KA 10*, 11, 01
L16 AK 10*, 11*, 01
L16 KA 10, 11, 01*

Recommender Resistors

R1, R4, R7	4.7KΩ
R2, R5, R8	220Ω
R3, R6, R9	470Ω
R10, R11, R12, R13	1.5KΩ
R15, R16	470Ω
R17..R24	1KΩ

Outputs by Number

00 L12 A
01 L16 A
02 L13 A
03 L9 A Red
04 L5 A Grn
05 L6 A Red
06 L8 A Grn
07 L7 A Wht

10 L15 A
11 L15, L16 K
12 L11 A
13 L4 A Wht
14 L10 A
15 L1 A Wht
16 L2 A Grn
17 L3 A Red

20 Segment A
21 Segment B
22 Segment C
23 DP
24 Segment D
25 Segment E
26 Segment G
27 Segment F

Wht LED DK CMD204UWC-ND
Grn LED DK 67-1754-ND
Red LED DK 67-1647-ND
Yel LED DK 67-1076-ND
R/G LED DK 160-1058-ND
SW1 DK 432-1191-ND
12 Pos Conn DK WM1412-ND
5 Pos Hdr DK S2101-05-ND
7 Seg DK P513-ND
12 Pos Hdr S2208-06

3-10-05	Oxford V.U.E., Inc.
DMF	Panel Module