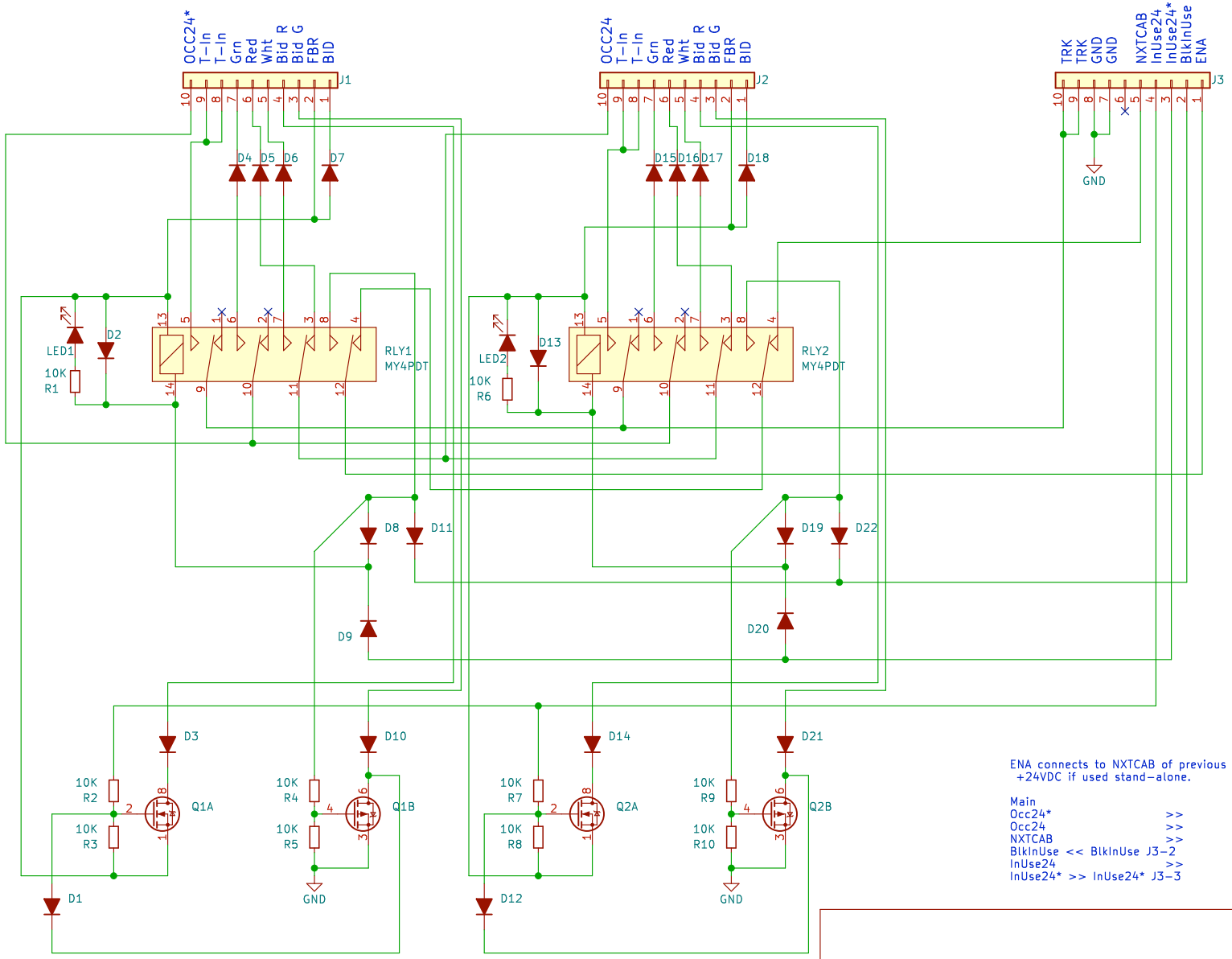

ENA connects to NXTCAB of previous board or
+24VDC if used stand-alone.

Main		Secondary (This PCB)
Occ24*	>>	Occ24* J1-10
Occ24	>>	Occ24 J2-10
NXTCAB	>>	Enable +24 J3-1
BlkInUse	<< BlkInUse J3-2	
InUse24	>>	InUse24 J3-4
InUse24*	>> InUse24* J3-3	

DMFE

Sheet: /

File: AuxRelays.kicad_sch

Title: Main Panel Aux Relays

Size: A	Date: 2021-02-25	Rev: n/c
KiCad E.D.A. kicad (5.99.0-9393-ga28cb98626)		Id: 1/1