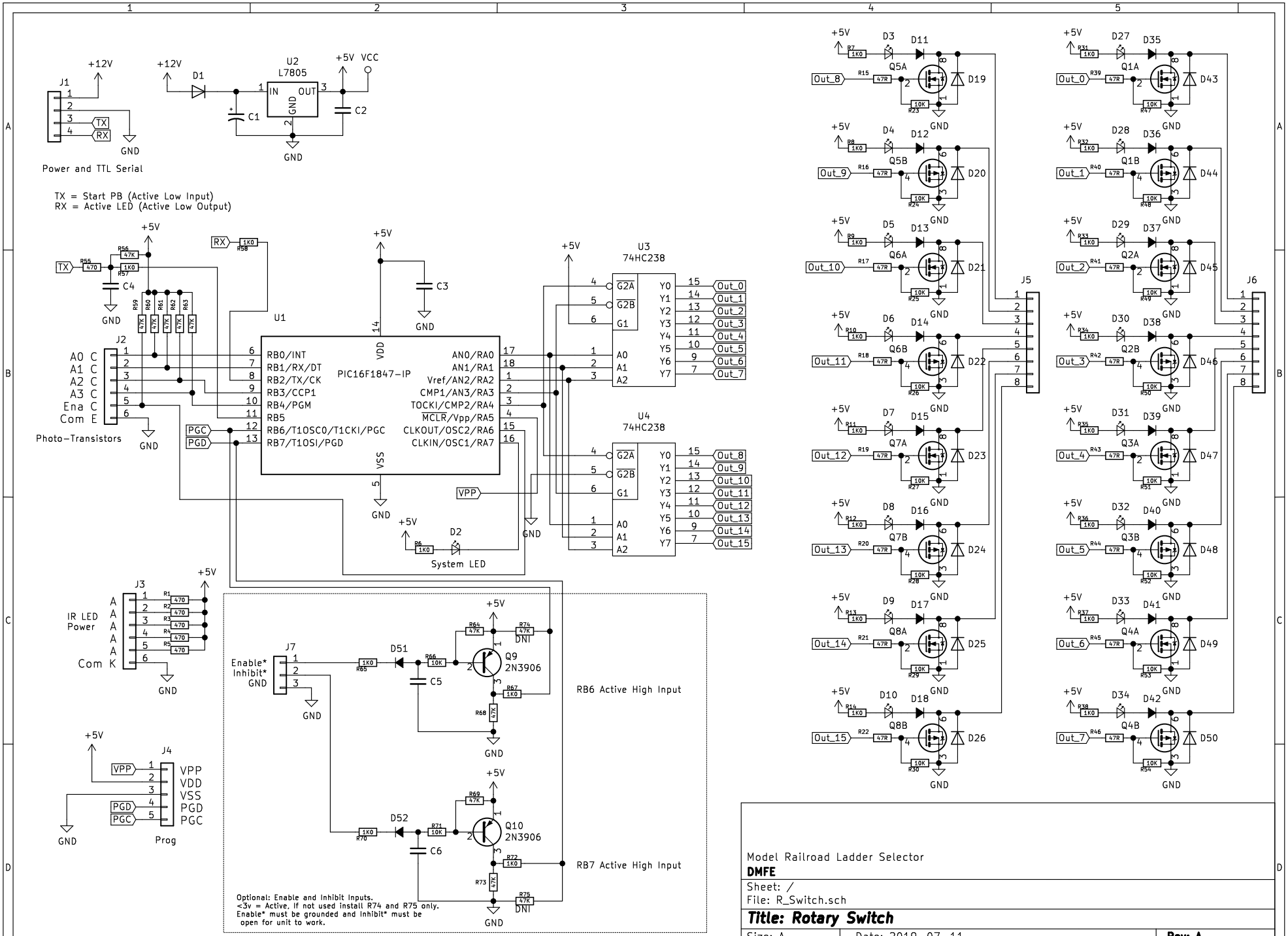

Rev. A Fixed backwards diodes D2, D3.. D11..
Added Remote Enable and Disable.

Model Railroad Ladder Selector
DMFE

Sheet: /
File: R_Switch.sch

Title: Rotary Switch

Size: A	Date: 2019-07-11	**Rev: A**
KiCad E.D.A. kicad (5.1.0-894-gde406e36d)		Id: 1/1