Rev. B 6/19/2018 Fixed J3 pinout, Fixed spacing of J4 to J2 to J7.

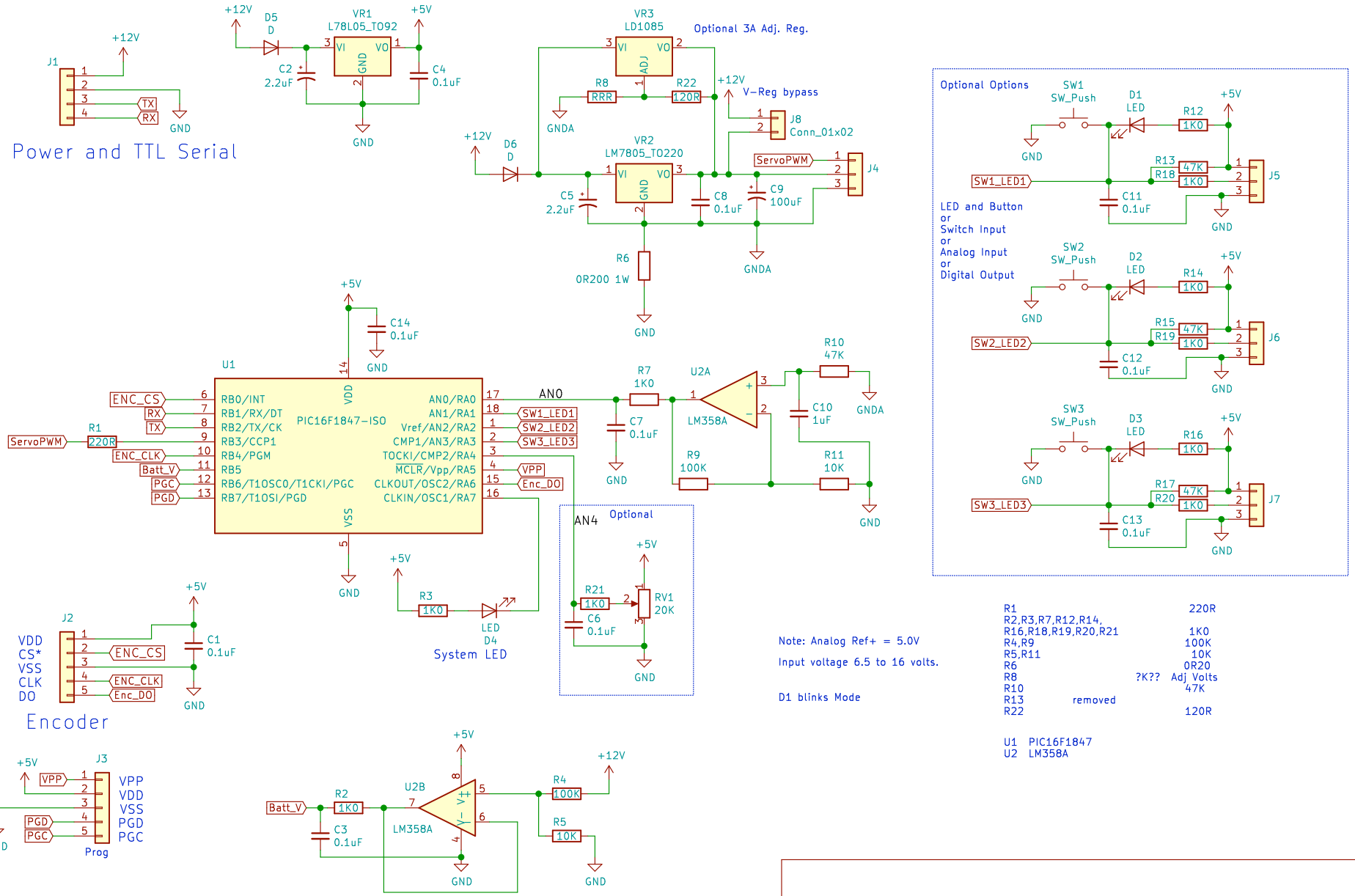

Note: Analog Ref+ = 5.0V

Input voltage 6.5 to 16 volts.

D1 blinks Mode

R1		220R
R2,R3,R7,R12,R14, R16,R18,R19,R20,R21		1K0
R4,R9		100K
R5,R11		10K
R6		0R20
R8	?K??	Adj Volts
R10		47K
R13	removed	
R22		120R

U1 PIC16F1847
U2 LM358A

TTL serial r/c servo controller

DMFE

Sheet: /
File: SerialServo.sch

Title: Serial Servo

Size: A	Date: 2018-06-19	**Rev: B**
KiCad E.D.A. kicad (5.0.0-rc2-39-ga12b9db)		Id: 1/1