Rev. B 6/19/2018 Fixed J3 pinout, Fixed spacing of J4 to J2 to J7.
Rev. C 1/20/2019 Modified for AS5047D Encoder
Rev. D 8/29/2020 Added SW3/LED3 for home switch...

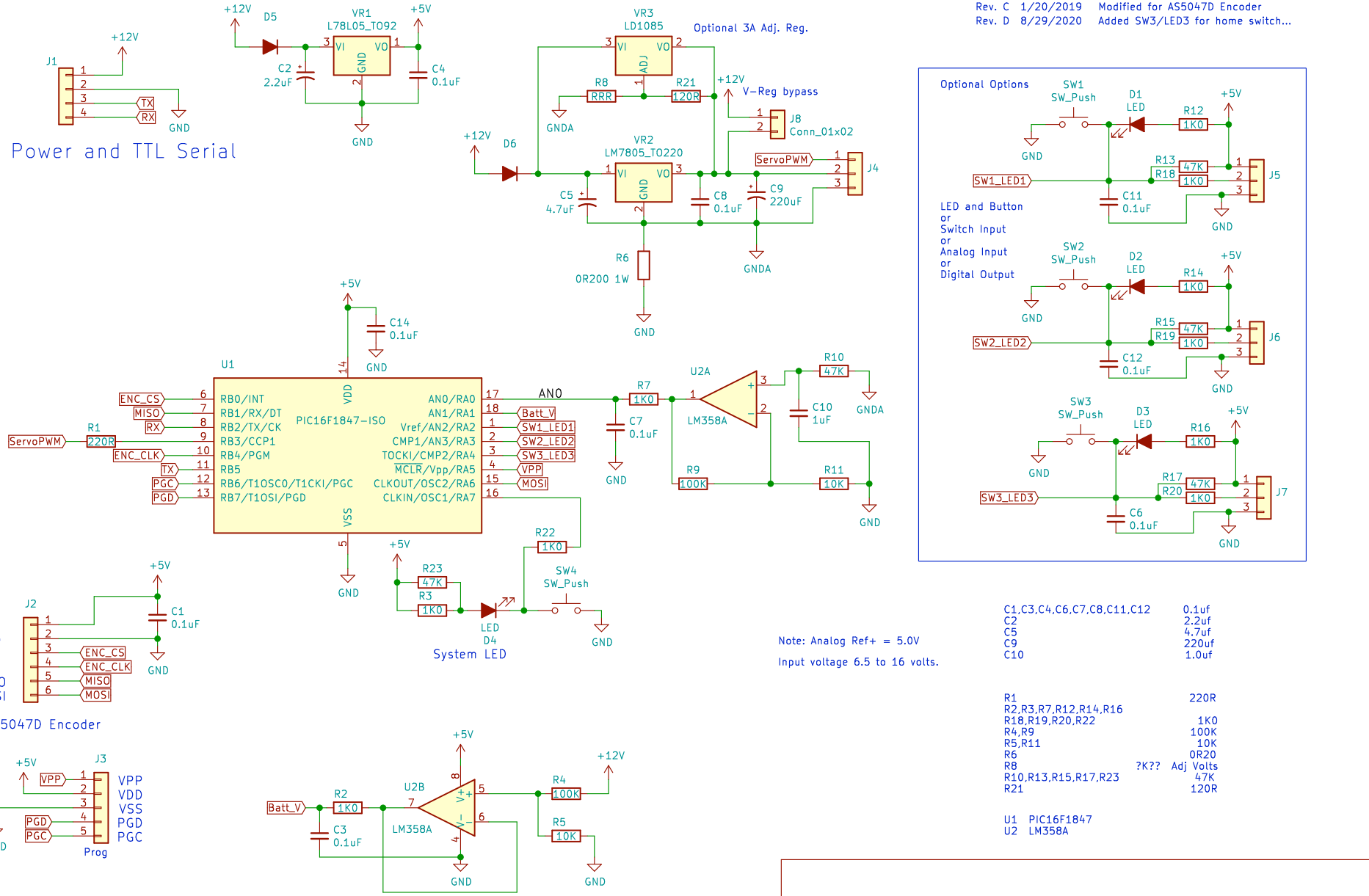

Note: Analog Ref+ = 5.0V

Input voltage 6.5 to 16 volts.

C1,C3,C4,C6,C7,C8,C11,C12	0.1uf
C2	2.2uf
C5	4.7uf
C9	220uf
C10	1.0uf

R1		220R
R2,R3,R7,R12,R14,R16		
R18,R19,R20,R22		1K0
R4,R9		100K
R5,R11		10K
R6		0R20
R8	?K??	Adj Volts
R10,R13,R15,R17,R23		47K
R21		120R

U1 PIC16F1847
U2 LM358A

AS5047D Magnetic Encoder w/ SPI
TTL serial r/c servo controller
DMFE
Sheet: /
File: SerialServo.sch

Title: Serial Servo

Size: A	Date: 2020-08-29	**Rev: D**
KiCad E.D.A. kicad (5.99.0-823-ga085f82be)		Id: 1/1