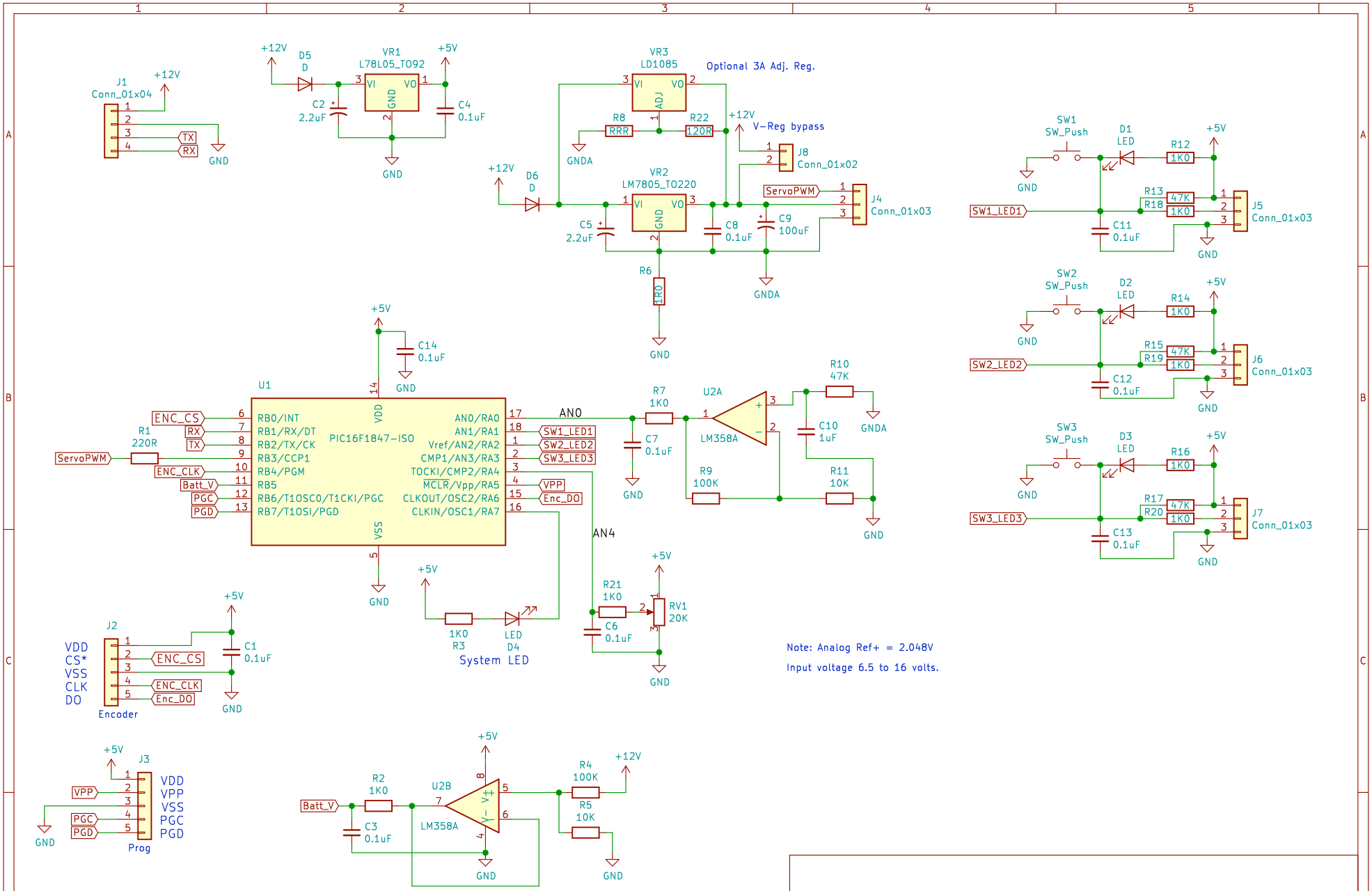

TTL serial r/c servo controller

DMFE

Sheet: /

File: SerialServo.sch

Title: Serial Servo

Size: A	Date: 2018-06-03	**Rev: A**
KiCad E.D.A. kicad (5.0.0-rc2-80-gf95b77b)		Id: 1/1