Rev. B 6/19/2018 Fixed J3 pinout, Fixed spacing of J4 to J2 to J7.
Rev. C 1/20/2019 Modified for AS5047D Encoder

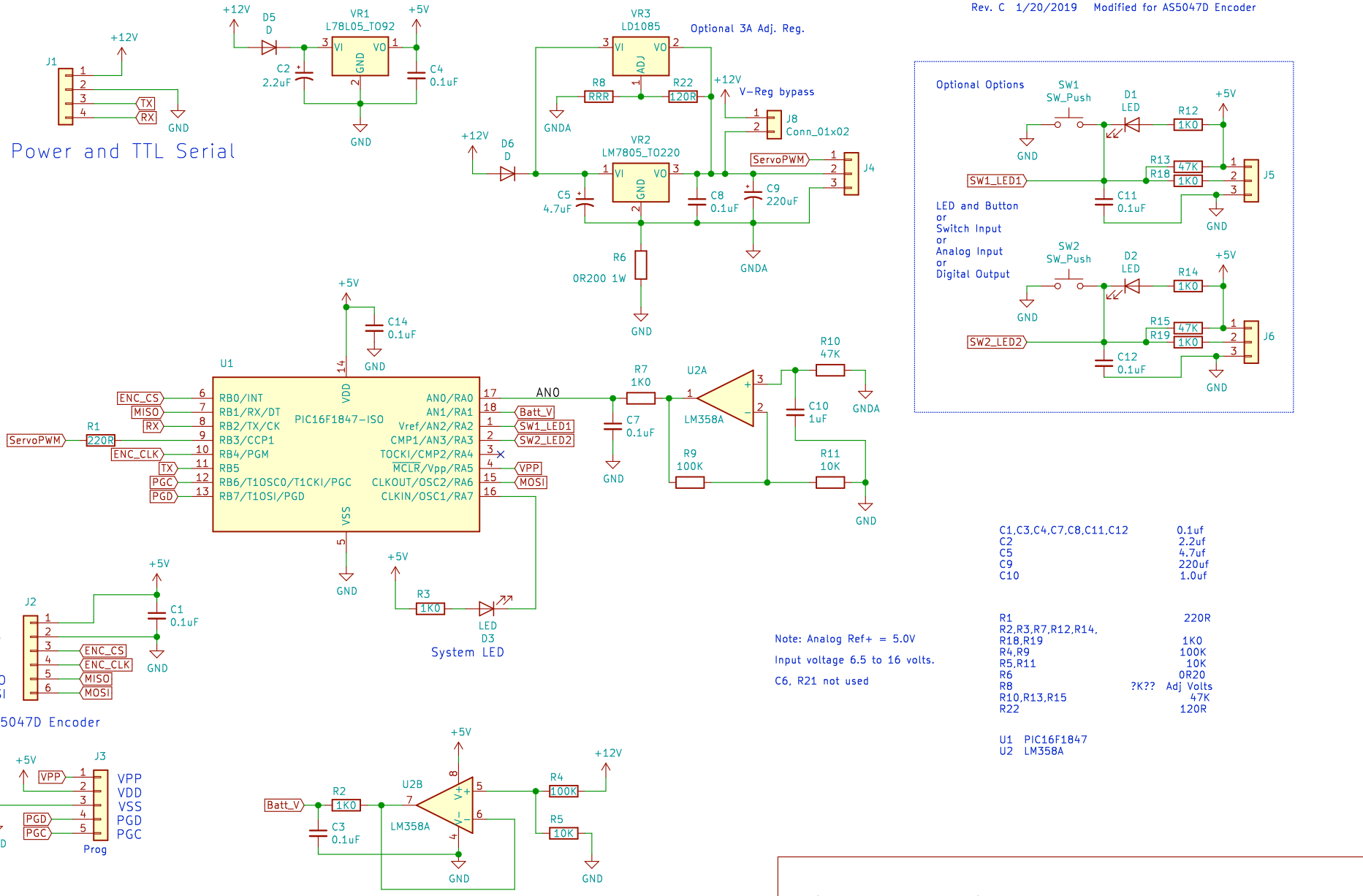

C1,C3,C4,C7,C8,C11,C12	0.1uf
C2	2.2uf
C5	4.7uf
C9	220uf
C10	1.0uf
R1	220R
R2,R3,R7,R12,R14,	
R18,R19	1K0
R4,R9	100K
R5,R11	10K
R6	0R20
R8	?K?? Adj Volts
R10,R13,R15	47K
R22	120R
U1	PIC16F1847
U2	LM358A

Note: Analog Ref+ = 5.0V

Input voltage 6.5 to 16 volts.

C6, R21 not used

AS5047D Magnetic Encoder w/ SPI
TTL serial r/c servo controller

DMFE

Sheet: /
File: SerialServo.sch

Title: Serial Servo

Size: A	Date: 2019-01-20	**Rev: C**
KiCad E.D.A. kicad (6.0.0-rc1-dev-1459-g8fd68358f)		Id: 1/1