Power

Archivo: Power.kicad_sch

Buffers_Out

Archivo: Buffers_Out.kicad_sch

Codec

Archivo: Codec.kicad_sch

Buffers_In

Archivo: Buffers_In.kicad_sch

MICROCONTROLLER

Internal of the RP PICO 2 converter disabled.
Supplied voltage through the output pin of the internal converter.

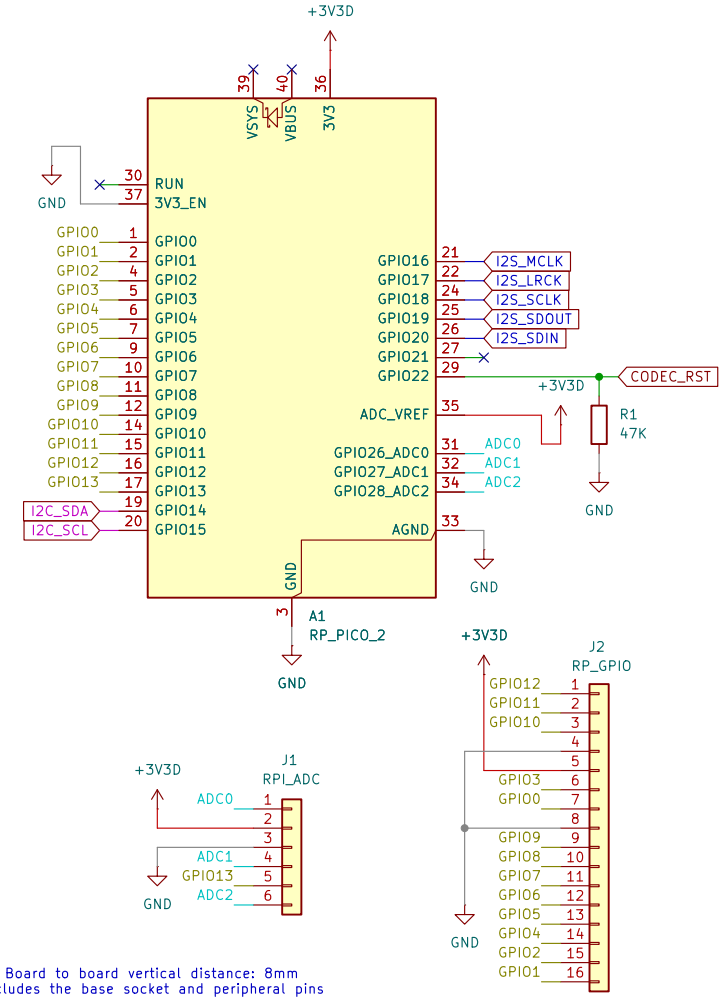

Board to board vertical distance: 8mm
Includes the base socket and peripheral pins

TOOLING

H1 Tooling
H2 Tooling
H3 Tooling

MOUNTING

H7 Mount
H8 Mount
H9 Mount
H10 Mount

DavidMolTor

Sheet: /
File: PicoFX.kicad_sch

Title: PICO FX

Size: A4	Date: 2026-04-08	**Rev: 1.0**
KiCad E.D.A. 10.0.1		Id: 1/5

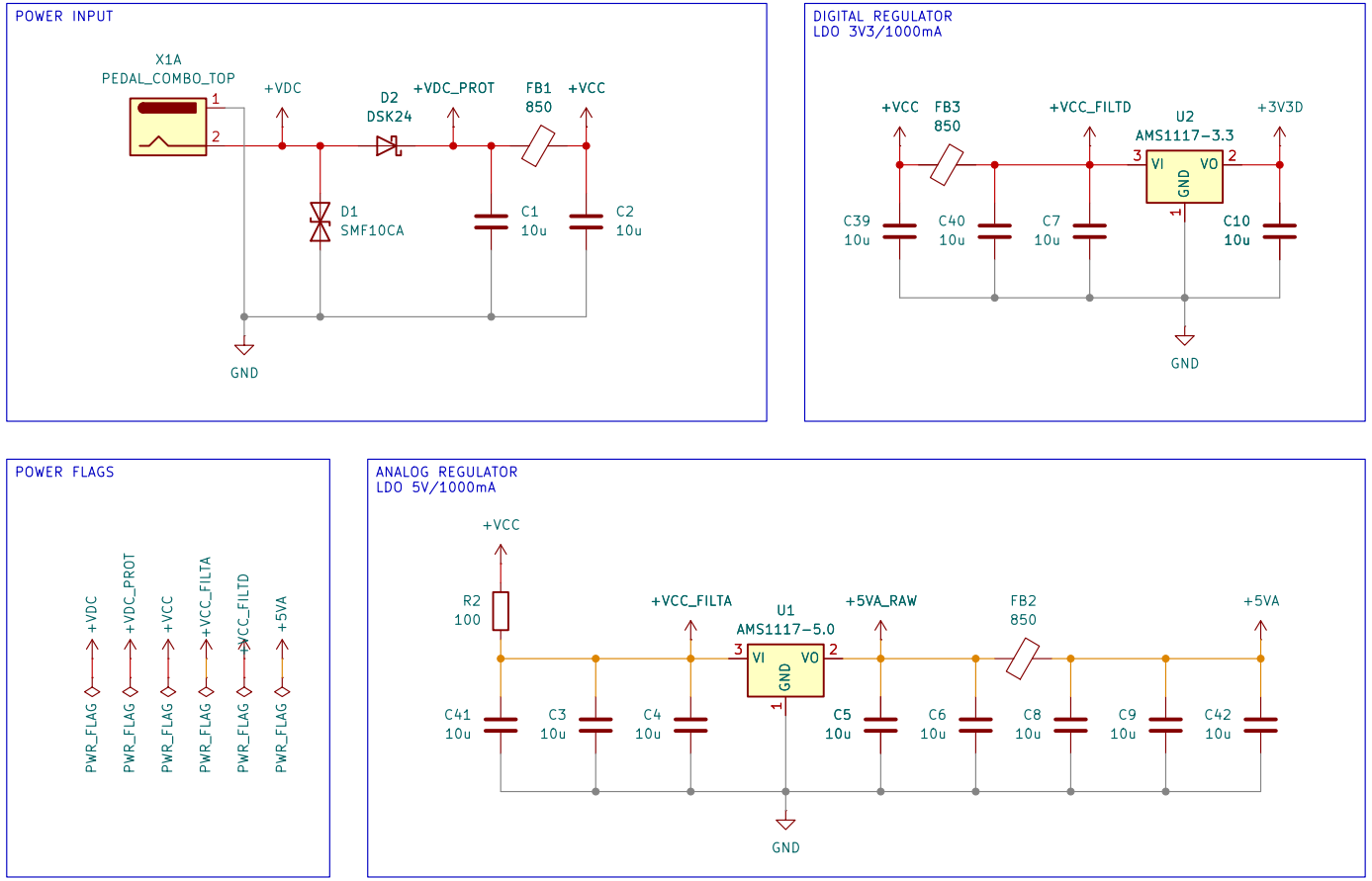

DavidMolTor

Sheet: /Power/

File: Power.kicad_sch

Title: PICO FX

Size: A4	Date: 2026-04-08	**Rev: 1.0**
KiCad E.D.A. 10.0.1		Id: 2/5

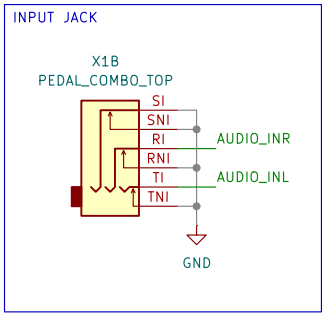

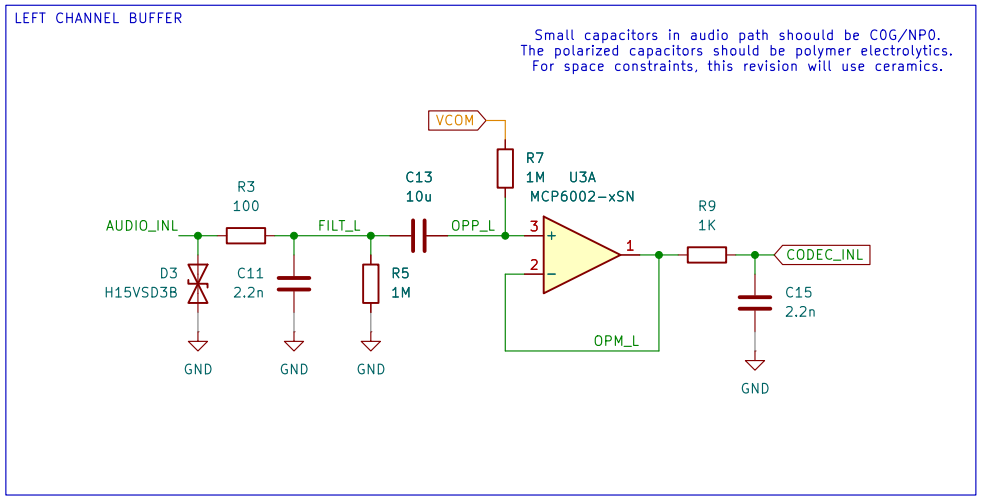

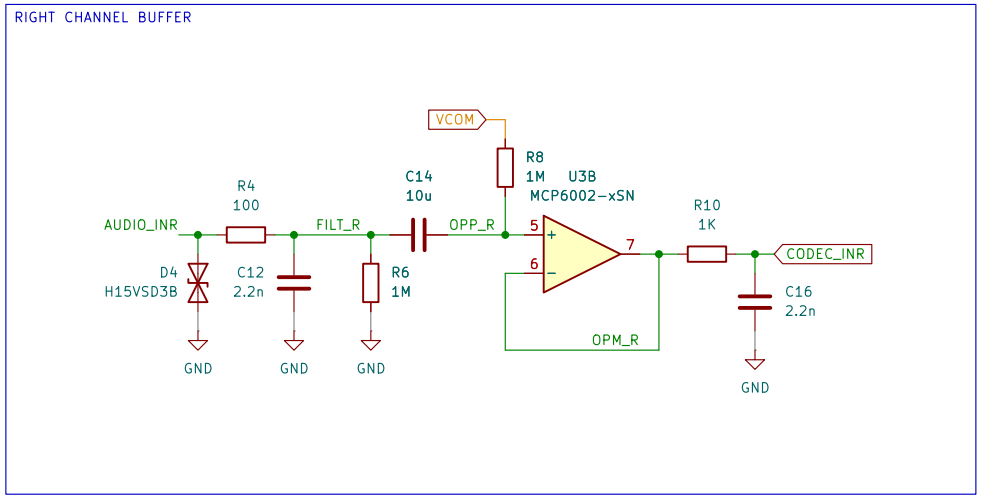

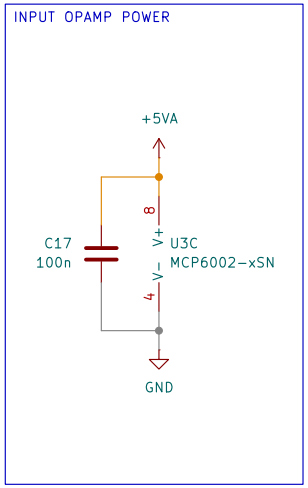

DavidMolTor

Sheet: /Buffers_In/

File: Buffers_In.kicad_sch

Title: PICO FX

Size: A4	Date: 2026-04-08	**Rev: 1.0**
KiCad E.D.A. 10.0.1		Id: 3/5

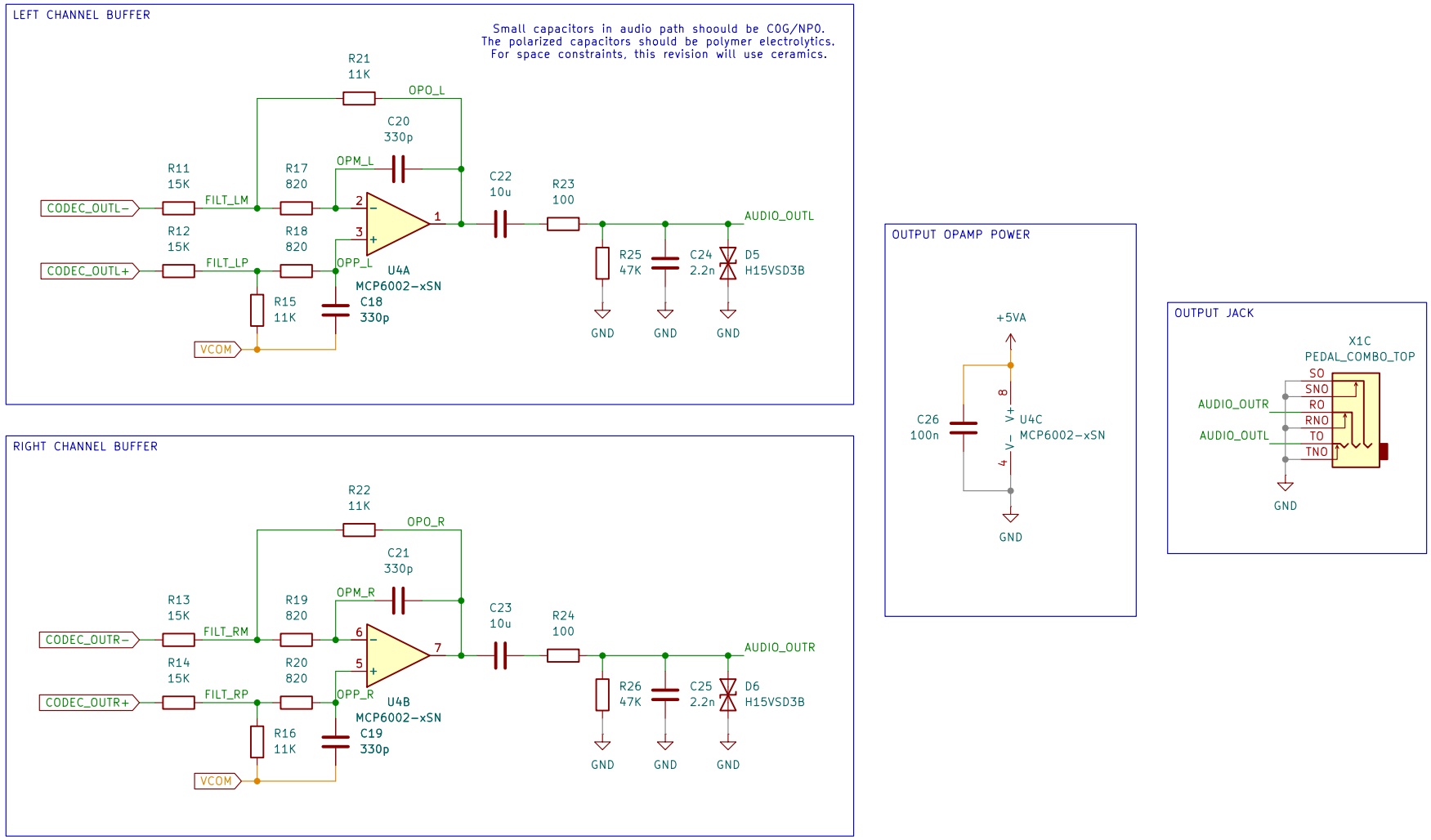

DavidMolTor

Sheet: /Buffers_Out/

File: Buffers_Out.kicad_sch

Title: PICO FX

Size: A4	Date: 2026-04-08	**Rev: 1.0**
KiCad E.D.A. 10.0.1		Id: 4/5

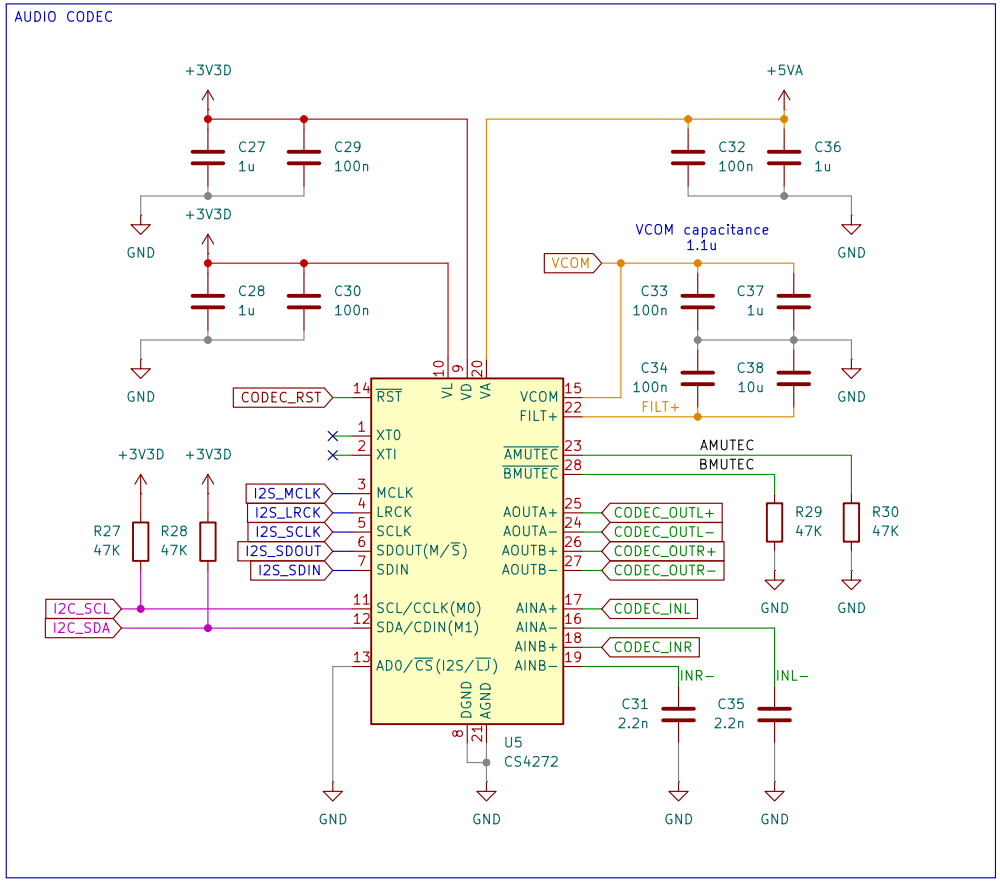

DavidMolTor

Sheet: /Codec/

File: Codec.kicad_sch

Title: PICO FX

Size: A4	Date: 2026-04-08	**Rev: 1.0**
KiCad E.D.A. 10.0.1		Id: 5/5