TU Delft

Master's Thesis Design Review 2025

Multi channel power-efficient current driver for wireless Neural stimulation — Design Review

8-Channel Wireless Neural Stimulation ASIC for Cortical Visual Prosthetics (TSMC 180nm BCD)

Author

Qian Xiaoyun

Supervisor

Prof. Serdijn

Motivation & Problem Statement

System Challenges

- **Channel Scalability:** Large-scale neural prostheses require hundreds to thousands of stimulation channels.
- **SAR Limits:** Wireless power is strictly limited by tissue Specific Absorption Rate regulations (~544 μW/mm^2 at 13.56MHz).
- **Power Overhead:** Conventional fixed-voltage supplies cause significant overhead power loss in output drivers.

Design Conclusion

A per-channel adaptive supply is essential to minimize power loss, but it must be implemented **without** relying on power-hungry compliance monitors.

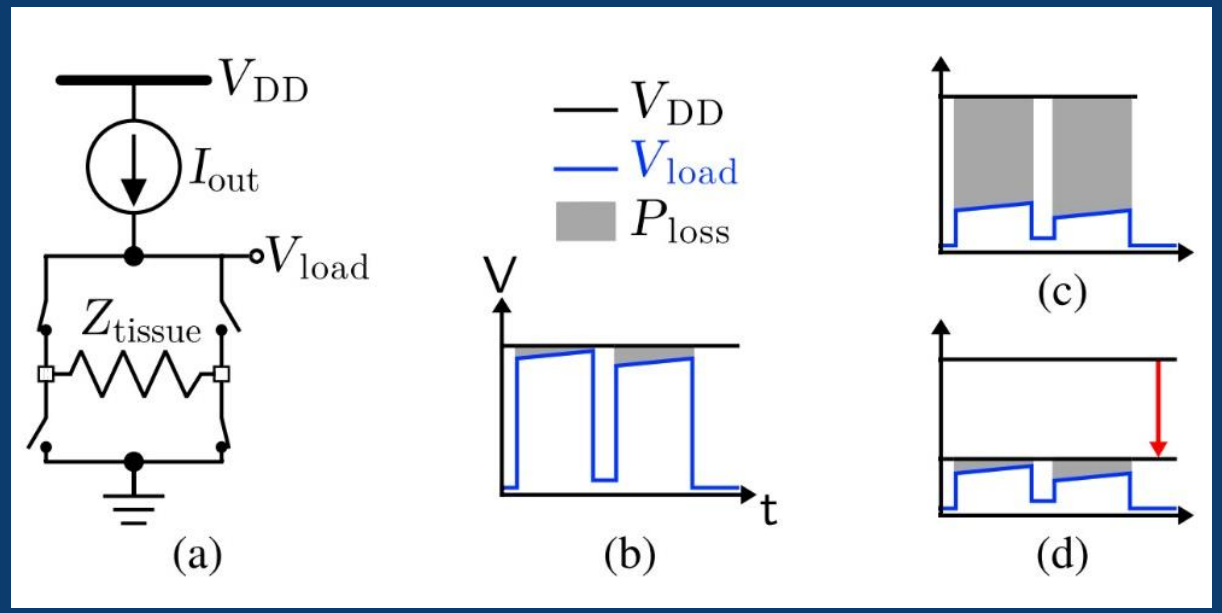

- **a** Conventional output stage architecture
- **b** Good voltage match with minimal power loss
- **c** Mismatch causes large overhead loss (gray)
- **d** Scaled supply effectively reduces overhead loss

Analog Architecture Overview

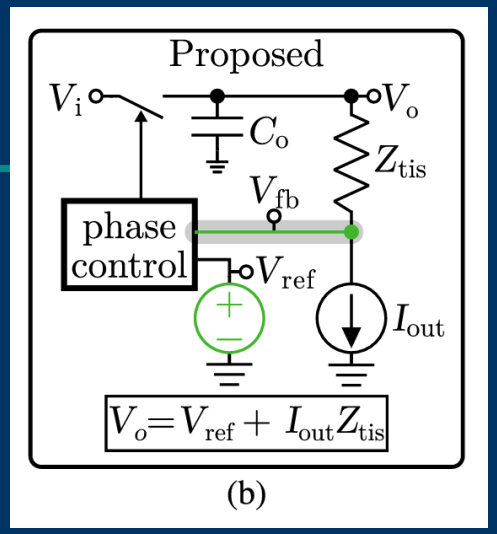

Energy Path Control Path Enable/Idle

SIN_p

Mp_out → Comparator → VCDL → NAND → Rect_switch → Mp_out → H-bridge

Control pulse

EN

Co

V_headroom

EN → Idle controller

Vc

PI_controller

IDAC → VSS

Feedback loop:
Mp_out → V headroom (V_fb) → Vc →
Control Pulse width
Target: Vheadroom = 75 mV

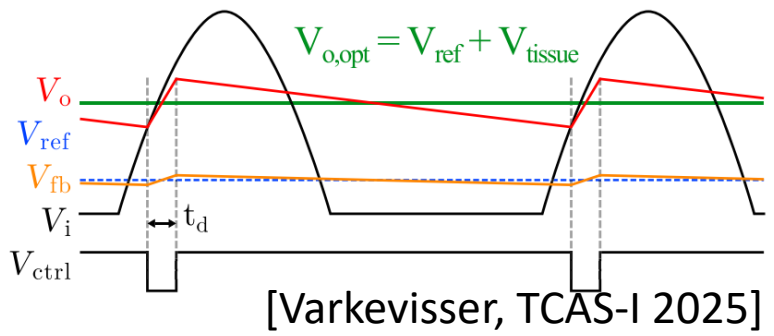

[Varkevisser, TCAS-I 2025]

Fig. 7. Timing diagram of the signals in steady state. Figure modified from

Digital Architecture

SPI Interface (10MHz)
Shared bus across 8 channels

Addressed Write
Update on `d_EN` rising edge

12-bit Packet: [CH|SW|Mode|IDAC]
3b|3b|1b|5b format

12-bit Packet Format: CH_addr (3b) | SW_addr (3b) | Mode (1b) | IDAC (5b)

Frame: 12.5μs

Digital Architecture Flow: CLK/DATA → SPI_V2 → Decoders → Per-Channel Assigners

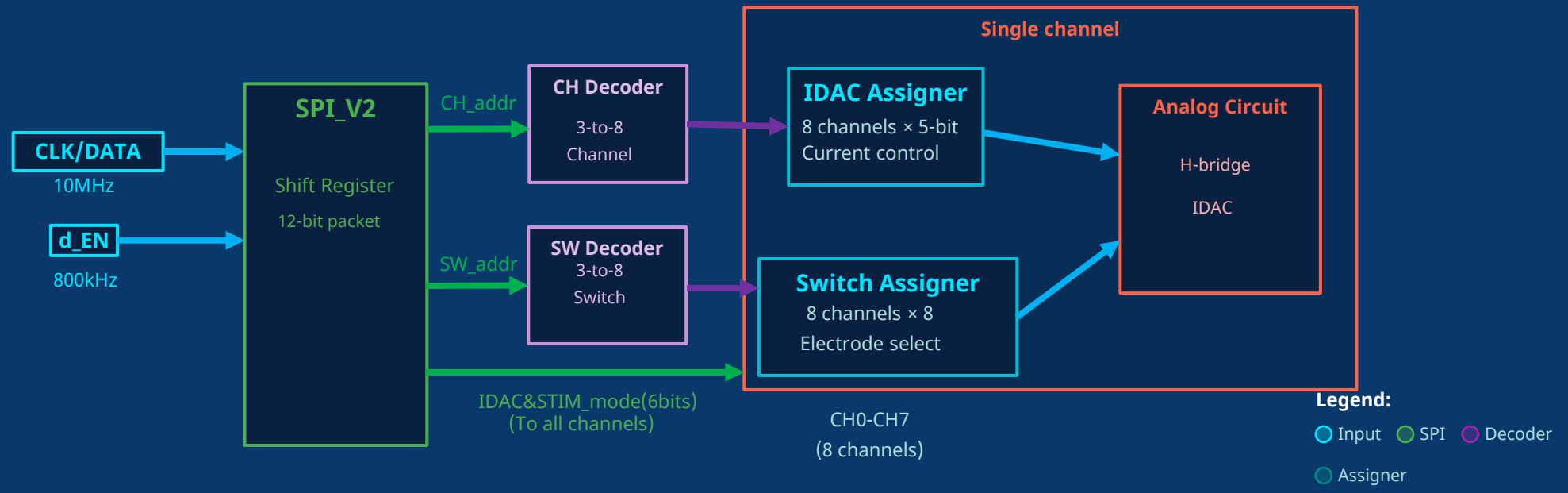

Key Analog Innovations

PI Controller

Replaces open-loop OTA to eliminate steady-state error, maintaining precise 75mV headroom.

Key Metric:
Bandwidth < 6.78MHz (Nyquist limit of 13.56MHz sampling)

Active-feedback IDAC

Op-amp actively clamps current mirror drain to 45mV, ensuring high-precision current delivery.

Key Metric:
Headroom reduced by 82% (from 250mV down to 45mV)

Idle Controller

Dynamically monitors load conditions and selectively disables power-hungry blocks during light loads.

Key Metric:
Disables comparator + PI when V_headroom > 200mV

Complementary NMOS Rectifier

Automatically switches to complementary NMOS conduction during low-voltage input cycles.

Key Metric:
Improves efficiency by ~150% at low supply voltages

TDM & 8-Channel Scaling

Two-Level Multiplexing

1. SPI Channel Polling (Outer Loop)

A single SPI bus sequentially addresses 8 channels. Each configuration frame takes 1.25μs minimum, totaling 10μs for all channels.

2. Electrode 1:8 TDM (Inner Loop)

Within each channel, the H-bridge switches between 8 electrodes sequentially. Each electrode receives one 100μs pulse per cycle.

Total System Capacity

8 Channels × 8 Electrodes = 64 Electrodes

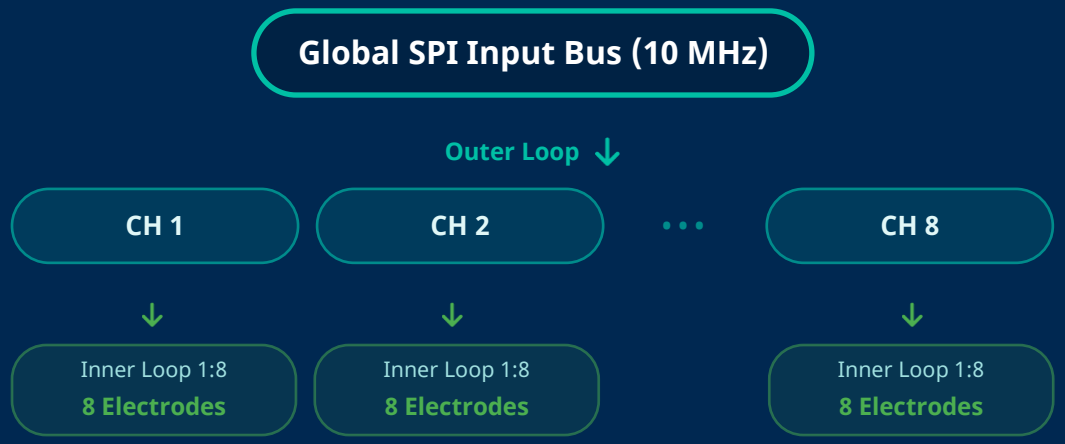

Two-Level Timing: Configuration vs. Stimulation

Level 1: Configuration-Time (SPI Channel Polling - Sequential Addressing)
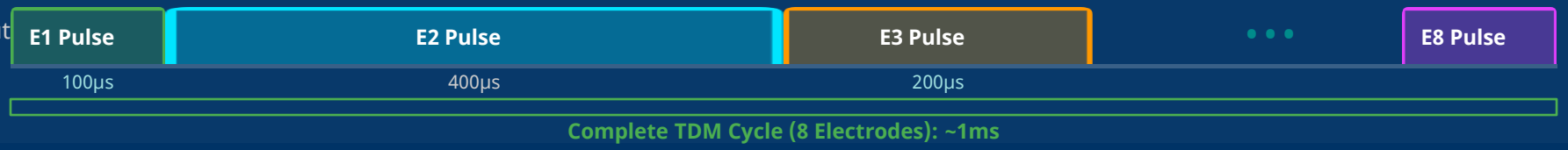
Level 2: Stimulation-Time (Per-Channel Electrode TDM)